GREASE PAN COLLECTION
QUICK START GUIDE

CHEF'S COMBI™

BEFORE COOKING



GPAN Accessory kit

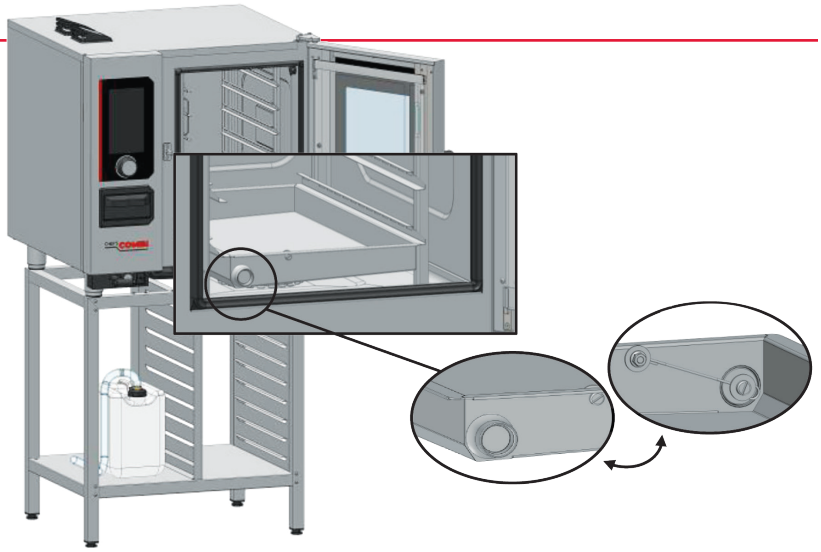

1. Place the grease collection pan on the lower level of the oven with the drain plug facing the outside. Ensure the cap is securely installed in the drain.

2. Place the grease collection container on the stand or on the floor.

AFTER COOKING

⚠WARNING **Contents will be hot and can cause burns. Take precaution when handling.**



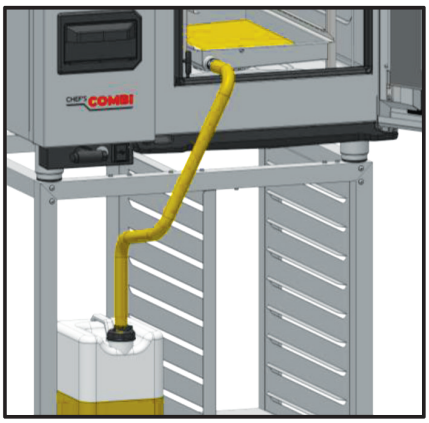

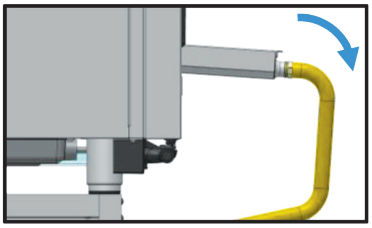

1. Wearing protective gloves, attach the hose with the quick connect into the pan, allowing the grease to drain into the container. Note: drainage is best when grease is warm.

2. After the grease collection stops, partially pull the pan out, and tilt to drain the remaining grease.

3. When finished draining, clean the pan and replace drain plug.