TRUE FOOD SERVICE EQUIPMENT, INC. • 2001 East Terra Lane • O'Fallon, Missouri 63366-4434
ph. 636.240.2400 • toll free 800.325.6152 • fax 636.272.2408 • parts fax 636.272.9471 • www.truemfg.com

Project Name	Location		AIA #
Item #	Qty	Model #	SIS #

SPEC SERIES®

ROLL-IN SOLID SWING DOOR REFRIGERATOR

models	STR1RRI89-1S	STA1RRI89-1S	STG1RRI89-1S



STR1RRI89-1S

Exterior	Stainless steel door, front & sides.
Interior	Stainless steel side walls, back, floor, door liner, & ceiling.

STA1RRI89-1S

Exterior	Stainless steel door, front & sides.
Interior	Aluminum side walls & back. Stainless steel floor & ceiling.

STG1RRI89-1S

Exterior	Stainless steel door, with matching aluminum sides.
Interior	Aluminum side walls & back. Stainless steel floor & ceiling.

plan view

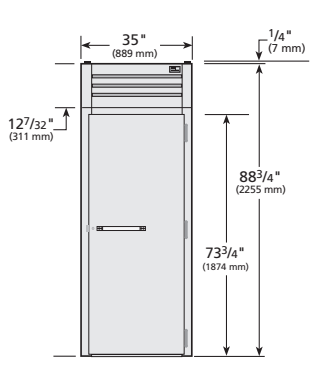

ELEVATION

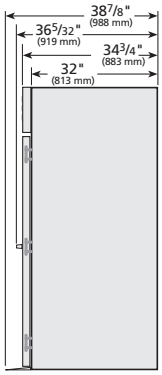

RIGHT VIEW

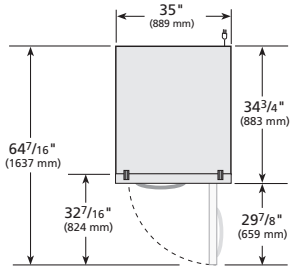

PLAN VIEW

SPECIFICATIONS

Dimensions	in.	mm.
Length	35	889
Depth	34¾	883
Height	88¾	2255
Electrical	**U.S.**	**International**
Horsepower	⅓	N/A
Amps	8.9	N/A
Voltage	115/60/1	
NEMA	5-15P	
Cord Length	9 ft.	2.74 M.

115/60/1
NEMA-5-15R

† Depth does not include 4¼" (108 mm) for ramp.
* Height does not include 1" (26 mm) for system mechanical components.

Specifications subject to change without notice.
Chart dimensions are roundedup to the nearest ⅛" (millimeters rounded up to the next whole number).

MADE WITH INNOVATION IN THE USA

Approvals

Available at

TRUE FOOD SERVICE EQUIPMENT, INC. • 2001 East Terra Lane • O'Fallon, Missouri 63366-4434
ph. 636.240.2400 • toll free 800.325.6152 • fax 636.272.2408 • parts fax 636.272.9471 • www.truemfg.com

Project Name	Location		AIA #
Item #	Qty	Model #	SIS #

SPEC SERIES®

ROLL-IN SOLID SWING DOOR REFRIGERATOR

models	STR1RRI89-1S	STA1RRI89-1S	STG1RRI89-1S



standard features

REFRIGERATION SYSTEM

- Factory engineered, self-contained, expansion valve (TXV) system using environmentally friendly R290 hydrocarbon refrigerant that has zero (0) ozone depletion potential (ODP), & 0.02 global warming potential (GWP).
- Extra large evaporator coil balanced with higher horsepower compressor and large condenser maintains cabinet temperatures of 33°F to 38°F (.5°C to 3.3°C) for the best in food preservation.
- Sealed, cast iron, self-lubricating evaporator fan motor(s) and larger fan blades give True roll-in's a more efficient low velocity, high volume airflow design. This unique design ensures faster temperature recovery and shorter run times in the busiest of foodservice environments.
- Top mounted refrigeration system with evaporator positioned out of food zone to maximize capacity.

CABINET CONSTRUCTION

- Insulation - Entire cabinet structure and solid door are foamed-in-place using a high density, polyurethane insulation that has zero ozone depletion potential (ODP) and zero global warming potential (GWP).
- One (1) heavy gauge stainless steel ramp.
- Designed to accept roll-in racks (inboard castors) with maximum dimensions of 27"L x 29"D x 72"H (686 mm x 737 mm x 1829 mm)(supplied by others).

DOOR

- Lifetime guaranteed bolt style door lock standard.
- Door lock standard.
- Lifetime guaranteed heavy duty all metal working door handle.
- Positive seal self-closing door with 120° stay open feature. Lifetime guaranteed external cam lift door hinges, Three (3) per door section.
- Magnetic door gasket of one piece construction, removable without tools for ease of cleaning.
- Field reversible hinge.

LIGHTING

- Incandescent interior lighting, safety shielded.

MODEL FEATURES

- Exterior digital temperature display, available with either
- °F or °C .
- Evaporator epoxy coated to eliminate the potential of corrosion
- Interior bumpers protect cabinet walls from abuse caused by roll-in carts.
- NSF/ANSI Standard 7 compliant for open food product.

ELECTRICAL

- Unit completely pre-wired at factory and ready for final connection to a 115/60/1 phase, 15 amp dedicated outlet. Cord and plug set included.

OPTIONAL FEATURES/ ACCESSORIES

(upcharge & lead times may apply)

- Stainless back. (STR, STA, STG)

METRIC DIMENSIONS ROUNDED UP TO THE NEAREST WHOLE MILLIMETER

SPECIFICATIONS SUBJECT TO CHANGE WITHOUT NOTICE

KCL	Model	Elevation	Right	Plan	3D	Back
	ST( )1RRI89-1S					