TU SERIES

2-SECTION SOLID DOOR FULL-SIZE REFRIGERATED UNDERCOUNTER

Project Name:	Location:		AIA #:
Item #:	Qty:	Model #:	SIS #:

TU SERIES - STAINLESS STEEL EXTERIOR & INTERIOR



Shown with optional casters & finished, bullnose top

72" WIDE MODEL
TU072HT

ENERGY STAR® Listed Commercial Refrigerator
For full listing visit energystar.gov

PLAN VIEW

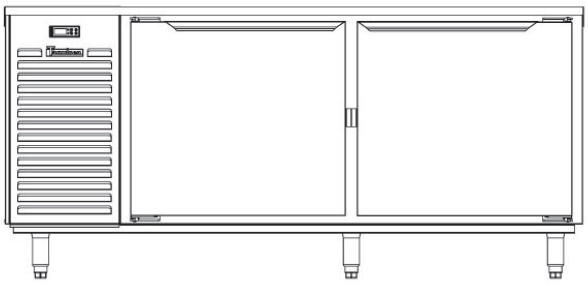

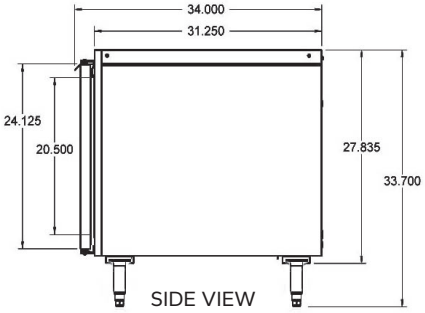

SIDE VIEW

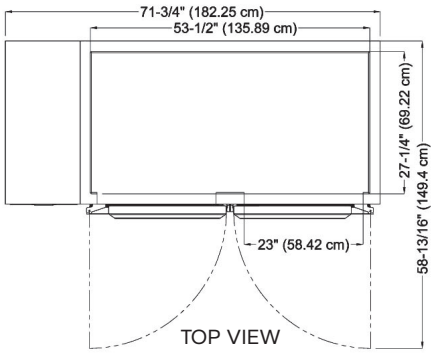

TOP VIEW

SPECIFICATIONS

DIMENSIONAL DATA	
Capacity cu. ft.	20 (566 L)
Length in.	71-3/4 (182.2 cm)
Depth in.	34 (86.4 cm)
Overall Height in.[2]	33-7/10 (85.6 cm)
ELECTRICAL DATA	
Horsepower[1]	1/4
Amps	4.0
Voltage	115/60/1
NEMA	5-15P
REFRIGERATION DATA	
Refrigerant	R-290
Charge Amount oz.	4.5 (127.6 g)
BTU	2180

When ordering please specify:
Voltage, Hinging, and Options



NEMA 5-15P

1. Based on 90°F ambient & 20°F evaporator.
2. Overall height includes 6" (15.2 cm) for legs. Optional worktop adds additional 3/8".

Models listed to applicable UL, CSA, and NSF standards by an approved NRTL. Consult the factory or unit data plate for additional information.

Specifications subject to change without notice. Chart dimensions are rounded up to the nearest 1/16" (centimeters rounded up to the nearest tenth).

2026 © Traulsen • 4401 Blue Mound Road | Fort Worth, TX 76106 • 1 (800) 825-8220 • www.traulsen.com

TU SERIES

2-SECTION SOLID DOOR FULL-SIZE
REFRIGERATED UNDERCOUNTER

Project Name:	Location:		AIA #:
Item #:	Qty:	Model #:	SIS #:

REFRIGERATION SYSTEM

• Self-contained, side-mounted system uses environmentally friendly, minimal GWP R-290 refrigerant

• Front-breathing system allows zero-clearance installation

• High performance, balanced system operates at 34-38°F (1.1-3.3°C) to maintain consistent, food-safe temperatures

• Specialized, clock-wise airflow design

• Water-resistant microprocessor control with an LED display

• Easy to clean, front-facing condenser coil with removable, wire condenser filter for easy cleaning and coil protection

• Thermostatic expansion valve metering device

• High humidity evaporator coil located outside the food zone

• Non-electric condensate evaporator

CABINET CONSTRUCTION

• Unfinished top standard

• Stainless steel exterior and interior

• Exterior back, bottom and sub-top are constructed of heavy gauge galvanized steel

• Load-Sure™ guard facilitates proper product loading

• Cabinet is insulated with an average of 2" (5.1 cm) thick high density, non-CFC foamed-in-place polyurethane

• A set of (6) 6" (15.2 cm) high legs; on adjustable channel system

• 9' (2.4 m) cord & plug provided

DOORS

• Stainless steel gasket-protecting door liners

• Stainless steel handles with gasket guard

• Locks standard for door models

• Doors are self-closing with a stay-open feature

• Standard door hinging left/right; other hinging available

• Field-reversible doors

• Magnetic, snap-in door gaskets

FACTORY-INSTALLED INTERIORS

• (2) adjustable, factory-installed coated wire shelves per section supported on shelf pins

FIELD-INSTALLED SUPPORT OPTIONS

• Set of (6) 3" (7.6 cm) casters

• Set of (6) 4" (10.2 cm) casters

• Set of (6) 6" (15.2 cm) casters

FACTORY-INSTALLED OPTIONS

• Stainless steel finished back

• (2) or (3) drawers in lieu of an door

• Flat stainless steel top with bullnose front

• Stainless steel top with 4" (10.2 cm) high backsplash

• Stainless steel top with marine edge

• Cabinet length extension of 3" (7.6 cm), 6" (15.2 cm), 9" (22.9 cm), 12" (30.5 cm), or 15" (38.1 cm)

WARRANTY

Both a six-year parts and labor warranty, and an additional one-year compressor parts warranty (for a total of seven years) are provided standard.

CAD and/or Revit Files Available

https://traulsen.kclcad.com

Approved by:	**Approved by:**	**Date:**

2026 © Traulsen • 4401 Blue Mound Road | Fort Worth, TX 76106 • 1 (800) 825-8220 • www.traulsen.com