# WatWater



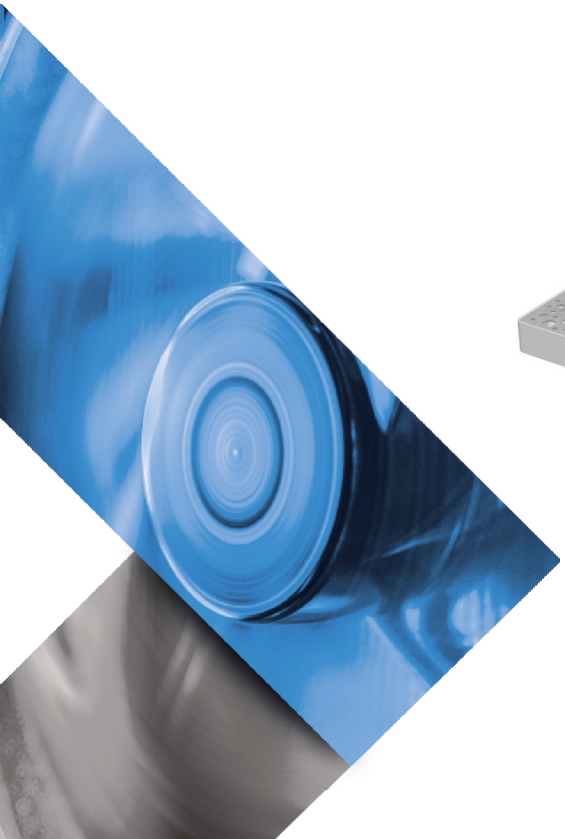

Instruction Manual

**IMPORTANT: Careful read the instruction manual and safety procedures before carrying out the installation of the dispenser**

**Always keep this document ready for use close to the dispenser**

All rights reserved.

No part of this document can be printed, copied or published in any way before obtaining written approval from the producer. The same is valid for numbers and figures.

The information given into this document are based on technical data known by the producer at the time of the publishing the document, concerning construction, materials characteristics and working methods, therefore this document can be modified at any time. As a result, these instructions should only be used as broad guidance for the dispenser's installation, use, and maintenance.

This document only applies to the dispenser's standard version; as a result, the manufacturer is not liable for any damages caused in devices sold with different technical specifications than the standard version.

The instruction manual has been edited with care and attention; however, the manufacturer cannot be considered responsible for any error or oversight that could be contained in the document or for any consequence resulting from these oversights.

**Enhanced Beverage Solutions**
12103 12th Ave S
Burnsville, MN 55337
+1 952.232.5900
info@enhancedbeveragesolutions.com

# Index


## General Instructions ...2
Pictograms and symbols
Customer service and technical support
Law regulations

## Safety Information ...4
Safety warnings
Safety precautions

## Technical Data ...5
Data
Description of components
Producer data
Warranty
Warranty exclusions
User responsibilities

## Unpacking ...9
First check of supplied material
Visual examination
Unpacking of supplied material

## Installation ...11
Installation location
Dispenser cleaning
Dispenser placing

## Connection and Duty Start ...13
Connection to water supply
Connection to power supply
Connection to $CO_2$ cylinder
Regulations
TemperatureRegulation
Management procedures

## Maintenance ... 18
Regularmaintenance
Frequently asked question

## Electrical system... 20

# 1. General Instructions

Please read the safety rules before using the dispenser

## Pictograms and Symbols

This manual includes following symbols and pictograms:



**Suggestion** Suggestion and advises to complete procedures in a simple way



**Read** Read safety instructions



**Beware** Procedures that, if not done carefully, can cause harm to the dispenser or the environment.



**Danger** Procedures that, if not done carefully, can cause harm to the dispenser or the environment.



**Danger** Electrical power



**Crossed bin** Do not dispose electric material in generic trash. Please contact the authorities, in charge in your country to inquire about the disposal of electric materials.

---



**Important** The supervision of an expert is required if this dispenser is used by children or persons with physical or mental disabilities, or who have no prior experience or knowledge of the dispenser. Children should not play with the dispenser



**Beware** Operations and fixing on electrical system and refrigerating system are to be permitted only to specialized and authorized staff



**Introduction** Please read the instruction booklet carefully before using the dispenser!

# Customer Service and Technical Support

If you need any information on specific settings, maintenance, or essential repairs that are not covered in the following manual, contact Enhanced Beverage Solutions. Enhanced Beverage Solutions is always the best company to contact if you require support.

Please make sure you have the following data available:

- Dispenser model name
- Dispenser serial number
- Date of purchase

You can find this information on label affixed on the dispenser and your invoice.

# Law Regulations

Laws concerning potable water treatment systems are respected accordingly.

The manual provided with the dispenser is divided in many sections that analyze and explain all the correct procedures that must be carried out to maintain a good performance level of the dispenser. It also explains possible health and safety risks for technicians and final users if the given procedures are not adopted.

This user manual is addressed to all “downstream” subjects who may use the water dispenser:

- Professionals that take care of transport, stocking, sale, installation, use, and maintenance (preventive, ordinary, extraordinary) from the entrance into the market to its final dismantlement.
- Direct users

# 2. Safety Information

## ⚠ Safety Warnings

- Do not place the dispenser on inclined surface, carpets, or shelf
- Only use potable water from water network. Do not use water coming from wells, rain deposit, rivers, or sea water
- Do not use hot water
- Use the dispenser in clean locations.
- Do not use the dispenser with temperatures below 40°F
- Do not use tubing longer than 10 feet
- Do not pull on tubing to move the dispenser
- Avoid exposing the dispenser to direct sun rays or high temperature
- Properly clean the dispenser periodically (see concerning chapter)
- Avoid leaving unattended heating systems or flammable substances near the dispenser
- Do not open or alter the dispenser
- In case of water leakage, close the main valve and call for maintenance
- The dispenser should not be used by children

## ⚠ Safety Precautions

- Keep the top portion closed during the use of the dispenser
- If filters have been placed, replace them periodically following producer recommendations
- After a long period of inactivity, and after every filter change, disinfect the dispenser accordingly (see concerning chapter)
- Only use recommended materials for internal cleaning (see concerning, periodic maintenance chapter)
- Do not move the dispenser, if water is flowing
- Only use on potable water

# 3. Technical data

## Data

w-width, h-Height, d-Depth

| | |
|---|---|
| Dimension | 9"w x 17.5"h x 14"d |

| | |
|---|---|
| **Weight** | 45 lbs |
| **Power supply** | 110V AC |
| **Total power absorption** | 250 W |
| **Capacity** | 25l/hr |
| **Compressor** | 156 Watt |
| **Coil** | Stainless Steel AISI 304 |
| **Water Pump** | Booster Pump 110V |
| **Water input** | 5/16" quickfit |
| **$CO_2$ input** | 1/4" quickfit |
| **Chassis** | CRS/Powder coated |

## Description of components

1. Compressor vent
2. $CO_2$ 1/4" quickfit
3. Water 5/16" quickfit
4. Thermostat
5. IEC power plug
6. Power fuse 5x20mm AL250V
7. Ambient water
8. Cold water
9. Sparkling water
10. Drip tray
11. Spout
12. Sparkling water regulator

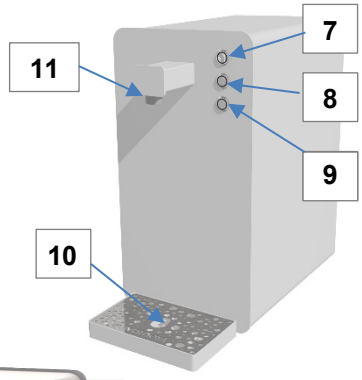


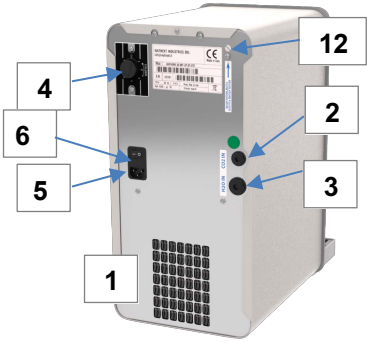

# Producer Data

The important data of the dispenser is displayed in the label affixed on the back or on one side of the dispenser and also on the back cover of this user manual.

Data available on the label:
Producer, dispenser model, CE brand, serial number, voltage [V] and frequency [Hz], power supply, power absorption [W], maximum working pressure [bar], belonging climate class of the dispenser, and refrigerant gas contained in the dispenser

⚠ **Important** In case of alteration or loss of producer label, the warranty will be no longer valid

# Warranty

Enhanced Beverage Solutions covers in warranty the dispenser for 12 (twelve) months from the day of invoice issue to the authorized reseller, that will grant in its turn a legal warranty to end user.

Warranty covers any deficiency of manufacture and construction.

Enhanced Beverage Solutions commits to replacing or repairing any component that is found to be defective after verification and validation by Enhanced Beverage Solutions at its headquarters in Minnesota. Malfunctions due to usury/dust are not included in the warranty.

⚠ **Important** Warranty does not cover components subject to usury (filters, pumps, faucets and mixer taps, pressure regulators, water meters, $CO_2$, bottles, etc). It also do not cover defect caused by normal usury or inappropriate use of the dispenser.

## Warranty Exclusions

Warranty will not cover damages occur due to negligence or different use of the dispenser, for example:

- Transport
- Negligence
- Inappropriate or unadapted use of the dispenser
- Different use from the one specified in this user manual
- Wrong power connection or electric shock due to atmospheric agents
- Incorrect installation, carried out by unauthorized personnel
- Natural events, calamities
- Maintenance support (ordinary or extra ordinary)
- Repairs carried out by unauthorized or unqualified technical personnel
- Any alteration of the dispenser
- Use of spare parts or equipment not directly supplied or approved by Enhanced Beverage Solutions
- Alteration or loss of producer label
- Unauthorized modification or disobedience of installation instructions

## User Responsibilities

In order to be covered by warranty given by the manufacturer, the end user must comply with precautions given in the user manual.

There are a few basic guidelines that must be followed:

- The installation must be carried out by specialized and authorized professionals following the instructions given in the user manual
- For ordinary maintenance the specialized professional must only use authorized spare parts

  **Enhanced Beverage Solutions refuses any responsibility in case of unauthorized spare parts have been used**.

Only with authorised spare parts, manufacturer can guarantee the conservation of best water features to final user.

- Do not unplug the dispenser from power supply while water is running.

Manufacturer can decline any direct or indirect responsibility that could be due to:

- Installation performed by non professionals
- Maintenance performed by non professionals
- Use of inadequate or unauthorised components
- Disrespect of instructions given in this user manual
- Modifications carried out on the dispenser, on software, on hardware and operations logics, unless previously authorised
- Unauthorised repairs carried out

# 4. Unpacking

⚠ **Warning** always check first, shipping data (delivery address, destination, package quantity, order number, dispenser model and code, etc..)

## First check of supplied material

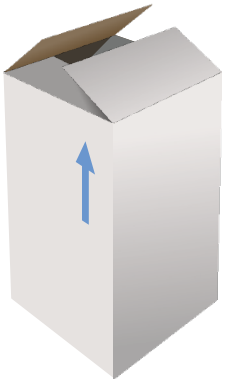

The dispenser must always travel in **vertical position**. If the dispenser has been delivered lying down, or upside down, the dispenser should sit vertical for 24 hours before preceding. Important do not power up unit for 24 hours.

The packed dispenser must look intact. It should not show impact signs, breakage signs, crumpled cardboard, and rips.

- It should not show alteration signs.
- It should not show the traces, of remained under rain, snow, cold, and low temperatures etc.

Any sign on the box could cause problems with the regular functioning of the dispenser.

⚠ **Danger:** the dispenser must travel and be stored in vertical position. Laying down or turning upside down can lead to irreversible damages to cooling circuit

## Visual Examination

The body of the dispenser (chassis) must result intact visually and in perfect condition.

⚠ **Important** Enhanced Beverage Solutions follows rigid and detailed control procedures before the shipping

# Unpacking of supplied material

After the preliminary check has been carried out, you can proceed with the unpacking of the dispenser. This is the procedure to remove the dispenser from its box:

- Cut the safety plastic strapping (if any)
- Open the upper part of the box (be careful using cutter)
- Remove Styrofoam, bubble wrap, or paper used to protect the dispenser
- Remove unit by holding body of dispenser chassis, being careful to avoid contact with thermostat or dispensing fountain.

Carefully examine the dispenser looking for possible damages. If any, please immediately inform the courier and the supplier.

⚠ **Important** Store the packing material far from children's reach

🕮 **Suggestion** Store packing material and boxes. They can be useful for future shipping of the dispenser to service center

# 5. Installation

## Installation location

The location where the dispenser is placed, should have following features:

- Temperature between [40°F to 95°F]
- 4" on all sides to allow good performances of cooling system
- Humidity [80% Max]
- No direct sunlight

The dispenser must not be exposed to weather, or placed in the environment where it could be subject to smoke, vapour, abrasive powders, abrasive agents, or where there is a risk of fire or explosions (where anti-explosion devices have to be used).

## Dispenser Cleaning

- Only use absorbent paper (for food use) that can be damp with neutral detergents, non-aggressive and diluted withwater.
- Do not use alcohol, Do not use solvent, corrosive or degreasing products.
- Do not touch supply nozzles if not wearing any disposablegloves.

## Dispenser Placing

Ensure a suitable location for the installation, which must bear the weight of the dispenser and must be flat (maximum inclination 5°) to also ensure 4" of ventilation.

Place the dispenser in order to guarantee a space of minimum 4 inch between the dispenser and the wall because cooling circuit must “breathe” as easily as possible.

A rise of temperature inside the dispenser can lead to malfunctioning, but also to an anticipated compressor failure. Do not install the dispenser in closed environment.

The dispenser should not be placed near direct or indirect heat sources or sunlight

⚠ **Warning** the power supply cable and the water supply must absolutely be kept separated. Be careful while moving the dispenser before the installation, avoiding shocks, falls or accidental hit that could damage to internal circuits

⚠ **Attention!** when the appliance is installed for the first time, it is absolutely recommended to carry out an initial sanitisation of the system for correct commissioning.

Follow the instructions given in the dedicated chapter "Ordinary Maintenance → Hydraulic Circuit" to carry out a perfect and effective sequence of operations in order to start the appliance correctly.

# 6. Connection and Duty Start

**Warning** Installation must be carried out to the letter by qualified and licensed professional technicians. We decline any liability for installation provided by unqualified staff. Avoid temporary connections.

## Connection to water supply

**Warning** WatWater dispensers are equipped with a water pressure regulator calibrated to 44 psi upstream of the dispenser. This precaution will avoid any possible damages due to pressure peak and water hammer originated in the water supply itself. Water pressure lower than 29 psi could cause malfunctioning. Installation and maintenance work must be done in a sanitary manner, with respect to the hands and equipment utilised. If you need to conduct another installation, use new tubing, instead of utilising the same tubing.

### Connect the tubing to the water supply

We suggest placing a shutoff valve upstream of the dispenser. The shutoff valve will be useful to close the water supply when needed (maintenance, moving the dispenser, replacing of cartridge, etc.)

Connect the tubing to the quickfit connection positioned on the back of the dispenser indicated as "$H_2O$ IN"

The connection to the water supply is carried out with 5/16" tubing connected to the dispenser in the inlet “$H_2O$ IN”

A filtration system or microfiltration can be connected to the water supply. It should be placed between the main water supply valve and the dispenser water inlet "$H_2O$ IN".

**Important:** Water supply features in order to guarantee the good functioning of the dispenser:

- Absence of overpressures
- Maximum pressure 50 psi
- Minimum pressure 29 psi

In the event that water supply pressure is higher than suggested (50psi), the internal pressure reducer calibrated at 44psi will be working.

Information A filtration system placed upstream of the dispenser requires same procedure to start. The water entering into the dispenser should be particulate-free and clear (no suspended elements).

Important Note: Light waters (like the one's coming from osmosis) can alter the $CO_2$ effervescence.

Before opening the main water valve, follow the indications given in section "Connection and duty start".

## Connection to the power supply

The connection with power supply is provided connecting the IEC cable with a power socket. This power socket must be connected to ground and suitable for dispenser requirements (see technical sheet).

- Check that line voltage meets the technical features
- Connect the provided power plug to the indicated socket of the dispenser.
- Connect the provided power plug to power supply socket.

Warning Immediately replace the power cable, if it is damaged and before turning the dispenser ON, follow the indications given in section "Connection and duty start".

## Connection to the $CO_2$ cylinder

1. Connect the pressure regulator R with $CO_2$ cylinder B checking the correct position of Teflon gasket.
2. Tighten the nut N and check that tubing T (outlet) is connected properly.

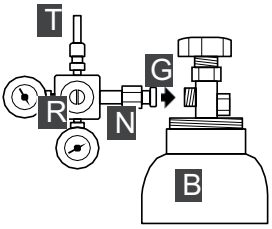

3. $CO_2$ cylinder must be kept in upright position
4. $CO_2$ cylinder must be secured with a chain or similar to avoid falling

Before opening the $CO_2$ cylinder, follow the indications given in section "Connection and duty start".

# Regulation

Once the dispenser is on duty, it is necessary to regulate the level of carbonation and the temperature.

### Regulation of sparkling water

The level of saturation and the effervescence of sparkling water are two quality indicators. The first is controlled by $CO_2$ pressure, while the second is determined by the type of water entering the dispenser and the saturation process.

1. Optimum incoming water should be 40 psi (29-55 range)
2. Optimum $CO_2$ gas should be 50-55 psi (max 65 psi)
3. Optimum performance $CO_2$ 14.5 psi over incoming water psi
4. Minor adjustments to incoming $CO_2$ psi will impact final pour

**Important** The carbonation also depends on temperature, that is to say the level of carbonation, rises with the lowering of water temperature. The final regulation has to be carried out once the optimal working temperature has been reached (60/90 minutes after first start)

## Temperature Regulation

The temperature of the water dispensed is determined by the incoming water temperature and the internal temperature of the cooling system. The thermostat regulates the temperature of the icermetic or aluminum block system.
The Thermostat must be set on 5.
During the hot season, depending on the temperature of the incoming water and of the ambient, it can be increased to 6 or in extreme cases to 7.
Generally if set on 6 or 7, the water could easily freeze.

## Flow Regulation

With a screwdriver the flow regulator placed at the rear of the dispenser can be set as follows:

- **Closing**: Lower flow
- **Opening**: Higher flow
- **Note:** Minor adjustments will greatly impact flow

# Management Procedure

Depending on the type of water required, the dispenser has two or three push buttons. A compensator is installed in the sparkling water line to regulate the water flow and ensure a good level of carbonation.

In order to prevent malfunctioning of the pump, it is mandatory that the dispenser runs water in its circuits. If water supply is missing, a protection system will stop the pump. The pump stops working after every 4 minutes of continuous work. To recover the functioning of the dispenser, please unplug the dispenser from power supply and connect again when water supply is back.

Periodic sanitation of the spout is essential to prevent water from bacteria contamination. We suggest a sanitation with a non-toxic disinfectant product.

# 7. Maintenance

## Regular Maintenance

### Hydraulic system

End user can only carry out regular maintenance operations described in following user guide with the help of specialist, if needed. The producer declines any liability if the given procedures are not being followed so producer reserve its right to suspend the warranty.

Periodic sanitation of the system is important to avoid bacteria growth. Especially when the water supply is not covered by chlorine treatment, periodic sanitation is mandatory (at least after every 6 month) or according to water treatment systems installed before the dispenser.

Sanitation of hydraulic system must be carried out with a good chemical solution product, that efficiently removes silt and bacteria.

### Cooling system cleaning

The winglet of condenser for ventilation must be cleaned by aspiration or with a light brush. Dust deposit will strongly reduce the effectiveness of cooling system and irreparably damage the compressor in the long term.

# Maintenance Operations

| Part | Type of operation | Frequency of maintenance operations | | | | |
|---|---|---|---|---|---|---|
| | | Daily | Weekly | Monthly | Quarterly | Annual |
| **Outer Case** | Cleaning | ● | | | | |
| **Drip tray** | Emptying and cleaning | | | When required | | |
| **Dispenser** | Sanitising | | | | ● | |
| **Condenser cooling winglet** | Cleaning | | | ● | | |
| **Water spout** | Sanitising | ● | | | | |

# 9. Electrical system

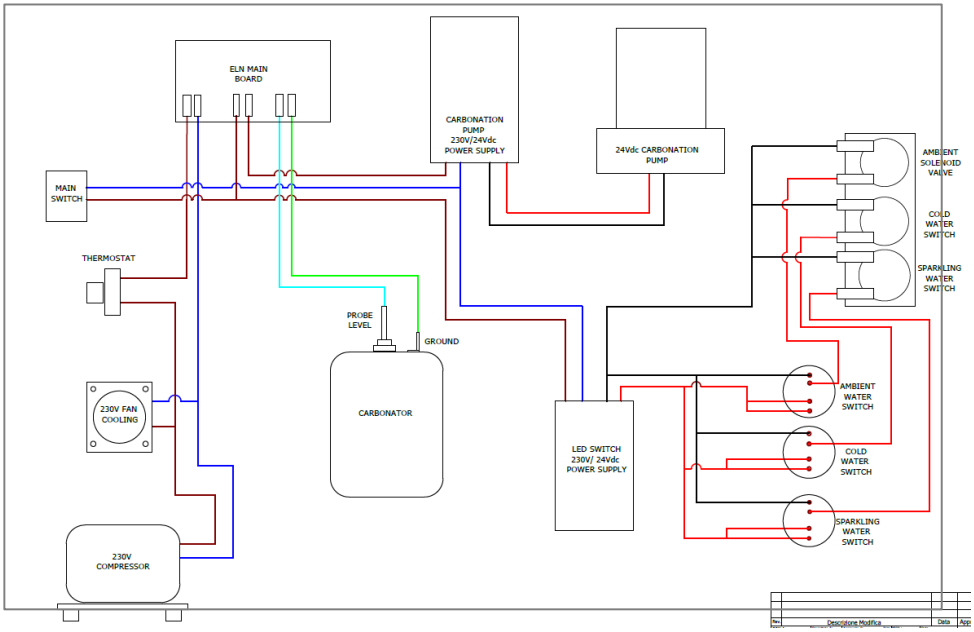




**Enhanced Beverage Solutions**
12103 12th Ave S
Burnsville, MN 55337
+1 952.232.5900
info@enhancedbeveragesolutions.com

ISO 9001
BUREAU VERITAS
Certification

CE
RoHS

MADE IN
ITALY