OWNER'S MANUAL

Installation - Operation - Maintenance



PizzaMaster®

PM 700 Series PM 800 Series PM 900 Series PM 1100 Series

PizzaMaster®

Congratulations on the purchase of your PizzaMaster Electric Deck Oven.

Built with high-quality components and engineered for long service life, **PizzaMaster Modular Ovens are designed to deliver reliable performance and consistent baking results in demanding environments.** To maintain safety, efficiency, and product quality, always use genuine PizzaMaster parts and follow the operating, cleaning, and maintenance instructions provided in this manual.

PizzaMaster ovens are supported worldwide by trained service specialists and authorized partners with the expertise, tools, and diagnostic equipment required to uphold the PizzaMaster standard.

Warranty

PizzaMaster ovens are backed by a manufacturer's warranty of two (2) years for spare parts and one (1) year for labor. The warranty covers defects in materials and workmanship under normal use and operation.

Wear parts, including lamps and door gaskets, are not covered by the warranty. The use of non-genuine PizzaMaster spare parts, unauthorized repairs, or modifications may invalidate the warranty.

For full warranty terms and conditions, please contact your local PizzaMaster representative, authorized service partner, or PizzaMaster directly.

This manual is your primary reference for operating, maintaining, and getting the highest performance from your equipment. We take pride in supporting you throughout the life of your oven, and this handbook is designed to give you the technical information and practical guidance needed to keep your oven running smoothly and your product quality consistently high.

It is your go-to reference for:

- Safety precautions
- Site preparation & setup
- Installation requirements
- Operating procedures
- Baking guidelines for optimal results
- Routine maintenance requirements
- Troubleshooting support
- Technical specifications

We thank you for choosing PizzaMaster.

When contacting your local PizzaMaster representative or PizzaMaster directly for assistance, please provide your oven's model designation and serial number. A copy of the power rating plate is included in the original owner's manual supplied with each oven from our factory. Sharing this information helps us support you more efficiently.

PizzaMaster® - Made by Svenska BakePartner AB follows a policy of continuous product development and reserves the right to modify specifications and designs without prior notice.



Index

Introduction 2

Warranty 2

Index 4

1 Safety 6

1.1 Safety Precautions and Warnings 6

2 Preparation 8

2.1 Pre-Installation Overview 8

2.2 Prepare your toolbox 9

3 Installation 10

3.1 Oven Assembly 10

3.2 Assembly Options 18

3.2.1 Oil and spice rack (includes Pizza Cutter) 18

3.2.2 Pizza Tool Holder 19

3.2.3 Fixed Unloading Shelf on 4-Deck Oven 19

3.2.4 Side Shelf 19

3.2.5 Lockable Casters 5-deck oven 20

3.2.6 Oven with spacers 22

3.3 Diassembling 3/4/5-Deck Ovens 24

3.4 Electrical Connection 30

3.5 Ventilation 32

3.6 Ventilation Options 33

3.6.1 Eyebrow hood 33

3.6.2 Extended hood (option) 33

3.6.3 Factory direct ventilation system (option) 33

3.6.4 Free-standing extractor hood 33

3.6.5 Extractor Hood 33

3.7 Steam System (option) 34

4 Operation 36

4.1 Display ED 36

4.1.1 Baking Timer 38

4.1.2 Baking Auto Timer 39

4.2 First Time Startup Ceramic Clay Stones with Crisping Function 40

4.3 First Time Startup Artisan High-Temperature Clay Stones 42

4.4 Steam System (option) 44

4.5 7-Day Automatic Start/Stop Timer (option) 45

4.5.1 Timer Setup (clock + language + date) 46

4.5.2 Program Setup (Start/Stop schedule) 47

4.5.3 Delete Program(s) 48

Index

4 Operation (continuation)

4.6 Oven Functions ... 49
4.6.1 3 Heat Zones ... 49
4.6.2 TempIQ Recovery™ ... 49
4.6.3 TempIQ Guard™ ... 49
4.6.4 FrontIQ Recovery™ ... 49
4.6.5 TurboStart ... 49
4.6.6 Display messages ... 49
4.6.6.1 OH ... 49
4.6.6.2 CAL ... 49
4.6.7 Power Guard™ (option) ... 49

5 Baking Guidlines ... 50
5.1 Stone Selection ... 50
5.2 Recommended settings ... 50
5.3 Bake Preparation ... 51
5.4 Making the Pizza ... 51

6 Maintenance ... 52
6.1 Preventive Maintenance ... 52
6.1.1 Start-Up Kit ... 52
6.2 Cleaning ... 53
6.2.1 Environmentally Friendly Cleaning ... 53
6.2.2 Daily ... 54
6.2.3 Weekly ... 54
6.2.4 Yearly ... 54
6.2.5 Steam System Cleaning ... 55
6.2.6 Steam System – Reset Water Blocker ... 55
6.3 Replacement of Wear Parts ... 56
6.3.1 Oven Lamps ... 56
6.3.2 Door Gasket ... 57

7 Troubleshooting ... 58
7.1 Start-Up Problems ... 58
7.2 Operation Problems ... 60
7.3 Baking Problems ... 61

8 Technical Information ... 64
8.1 PM 700 Series ... 64
8.2 PM 800 Series ... 65
8.3 PM 900 Series ... 66
8.4 PM 1100 Series ... 67

1.1 Safety Precautions and Warnings

Please read this manual carefully. It contains important safety precautions and warnings to ensure proper and safe operation.

PizzaMaster Electrical Deck Ovens are specialized appliances designed for baking pizza, bread, and similar products.





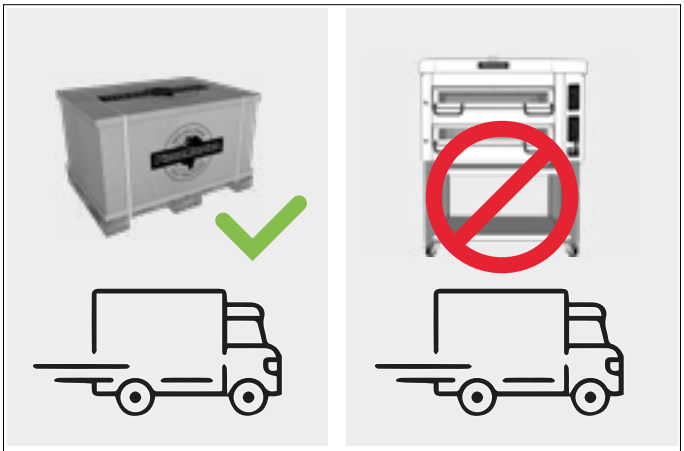

For safe transportation, the oven must always be packed in its original packaging. The legs with casters are intended for service access only and should not be used for transportation.

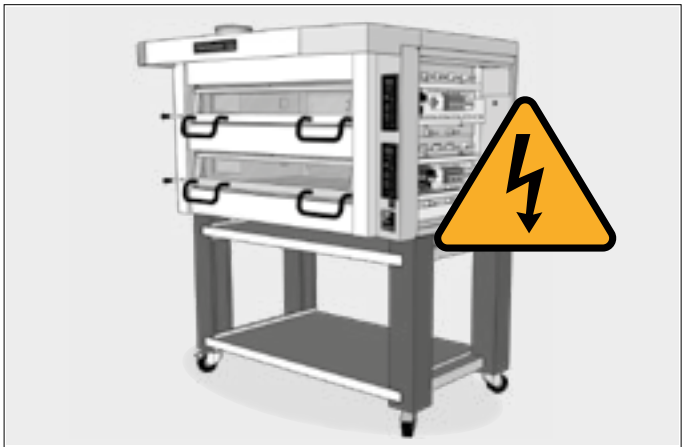

High Risk of Electrocution!

Disconnect the appliance from the power supply before opening.To avoid the risk of electric shock, DO NOT remove or open the electrical cover. Refer all servicing to qualified personnel.

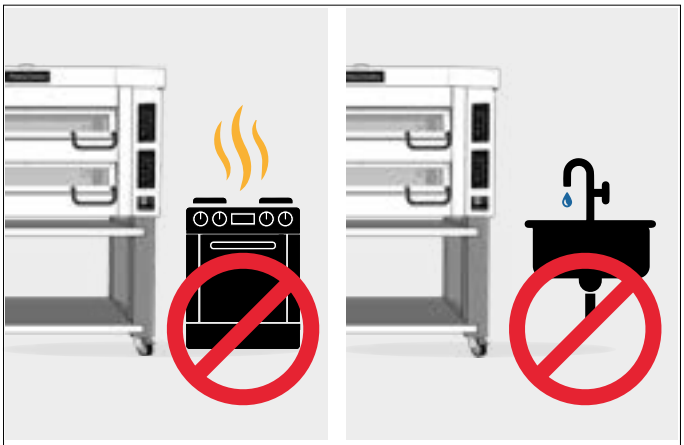

To ensure maximum service life and safe operation, avoid installing the oven near heat-radiating equipment, sinks, fryers, or other appliances that may spray liquids.



DO NOT clean the oven using high-pressure water or a water hose.



The oven must be installed on the support supplied with it or on optional spacers (**page 22**). It is also important that the floor is flat so the oven remains level and stable.

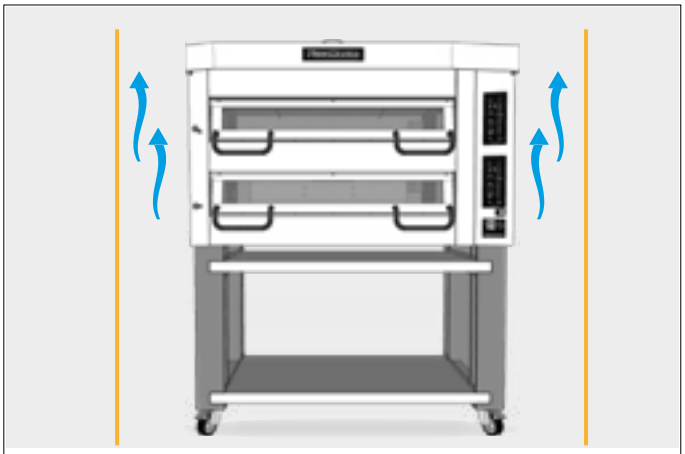

For ventilation reasons, position the oven leaving 50 mm (2” in) between the oven and any adjacent wall.



If possible, position the oven so that its right-hand side can be accessed easily in order to remove the right-hand panel. This gives easy access to the electrical cabinet and facilitates servicing of the oven.

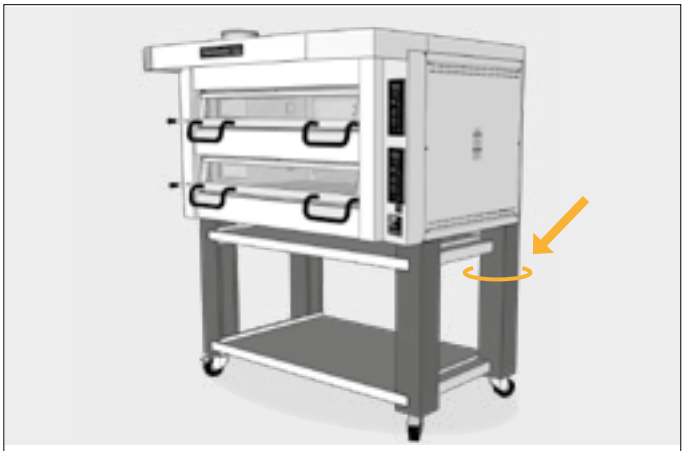

The oven must be installed with an adequate restraining to limit the movement of the appliance without transmitting stress to the electrical conduit. The restraining must be fastened to one of the supports leg or spacers. Power supply for the appliance must also be installed with a flexible conduit.



This oven is not intended for use by persons (including children) with reduced physical, sensory, or mental capabilities, or by those lacking experience and knowledge, unless they are supervised or instructed in the safe use of the oven by someone responsible for their safety.

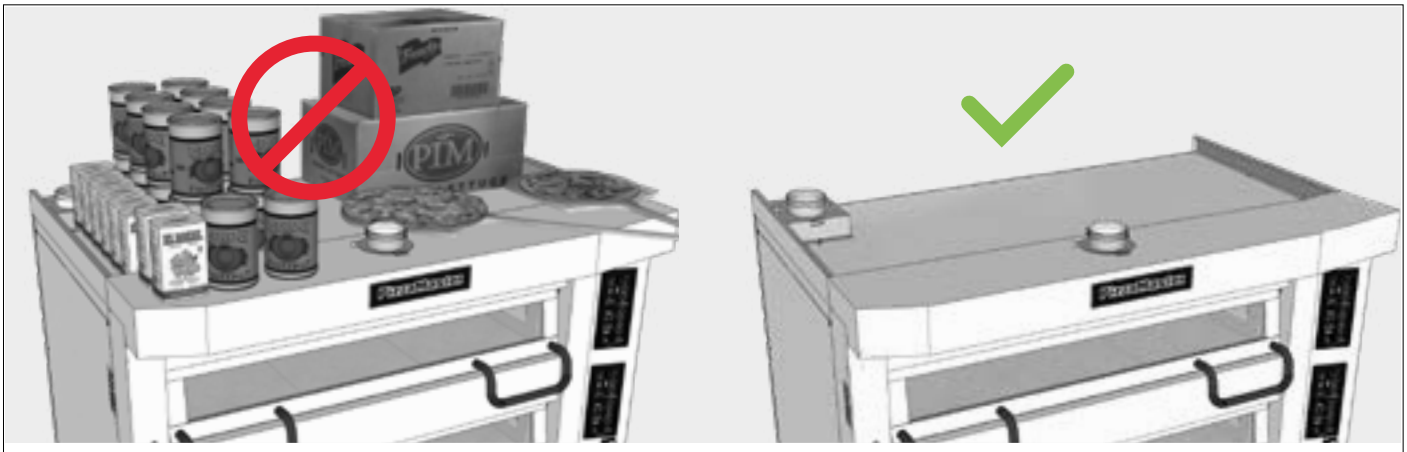

DO NOT place any objects that block ventilation. This can affect baking performance and may cause a fire. The top of the oven is not intended for food storage or food preparation.

2.1 Pre-Installation Overview

PizzaMaster provides the largest electric deck oven range in the world, with 95 sizes, more than 1 500 models, and over 1 000 000 possible configurations.

To ensure proper function and safety, it is important to understand the requirements of your specific oven model, including its voltage and any selected options, before installation.

Warning!

For safety reasons and to maintain warranty coverage, all electrical work must be performed by a qualified electrician.

Important!

Refer to your **technical specifications** at each step.



Download Technical Specification →

Safety First!

Ensure safe installation for safe operation.

PizzaMaster emphasizes the importance of using qualified technicians for each stage of installation to ensure safety and optimal oven performance.

- ✔ **Qualified Technician**
- ✔ **Qualified Electrician**
- ✔ **Qualified HVAC Technician**
- ✔ **Qualified Plumber**

Read and understand **Safety Precautions and Warnings** (page 6).

Placement

Final placement and on-site handling:

- ✔ Provide sufficient space for oven placement.
- ✔ Add 50 mm (2") clearance between the oven and any adjacent wall.
- ✔ Ensure there is sufficient workspace in front of the oven.
- ✔ Check that the oven fits through all access paths.
  If the oven needs to be divided for access, see Disassembly (**page 24**).
- ✔ Install the oven on the provided support or optional spacers:
  - See **Assembly,** starting on (**page 10**)
  - See **Oven with Spacers** (**page 22**)

Ensure the designated installation area is prepared for Placement, Electrical, Ventilation and Water (steam option only).

Electrical

Oven must be installed with:

- ✔ An external main switch with minimum 3mm contact gap
- ✔ Flexible conduit for each power supply cable
- ✔ Cable gland with locknut for each power supply cable
- ✔ Correct number of power supply cables
- ✔ Correct cable size
- ✔ Correct breaker size with type C characteristics
- ✔ Correct voltage and phases
- ✔ Adequate restraining relief

Verify the electrical supply before installation. Refer to **Installation – Electrical Connection** (**page 30**) and the Technical Specification.

Ventilation

Multiple possibilities:

- ✔ EPA 202 Tested
- ✔ Factory Direct Vent System (option)
  - Single connection 200 mm (7.9 in)
  - Extended hood is required
- ✔ Direct Ventilation
  - Double connection
  - Rear 100 mm (3.9 in)
  - Front 160 mm (6.3 in)
- ✔ Extractor hood
  - Should be 15 cm (6 in) larger than outer edge of the oven
- ✔ Ventilation hood with size option

PizzaMaster provides several options for ventilation connections, see **Ventilation** (**page 32**).

Water (Steam option)

Water quality requirements:

- ✔ Water drain: Not required.
- ✔ Backflow protection: Required, not included
- ✔ Auto shut-off valve: included
- ✔ Water softener: Recommended
- ✔ Incoming water pressure: 0,2-0,6 MPa (29 – 87 psi)
- ✔ Connection: G ¾" (NH ¾" for USA & Canada)
- ✔ General water quality: Drinking water, cold
- ✔ Flush water supply before connecting to oven

Water connection is necessary for the steam system (option). See **Steam System** (**page 34**).



First Time Start-Up

Before first use:

- ✔ Installation Checklist executed (provided)
- ✔ Remove packaging material before startup
- ✔ Burn-Off procedure must be completed, (Procedure differs depending on hearthstone type) see (**page 40-42**)
- ✔ Ensure ventilation is active during Burn-Off
- ✔ Do not bake before Burn-Off has been completed
- ✔ Settle cleaning routines from day one

Important

Read the information attached to the oven door handle before starting the oven.
For further information, refer to First Time Start-Up in the PizzaMaster Video Library →

2.2 Prepare your toolbox

PizzaMaster Modular Electric Deck Ovens are engineered to minimize tool use during installation and service, with user-friendly features supported by clear, detailed instructions.

This smart design streamlines the installation process and reduces the need for specialized tools, ensuring easier maintenance and dependable service over the life of the oven.



Recommended tools for: Installation- Assembly

Utility knife

Ratchet
- With socket extension
- With socket 17 mm

Cordless screwdriver
- With bit socket
- With bit PH2
- With socket holder
- With Socket 8 mm

Needle-nose pliers

Recommended additional tools for: Installation- Disassemble

Screwdriver
- Flat 4

Wrench
- With 14 mm (only for steam option)

Spring puller

Lifting Devices

Depending on the oven model and installation procedure, pallets and/or a lifting device may be required. Refer to the weight and dimensions in the **Technical Specification** and use equipment appropriate for the load.

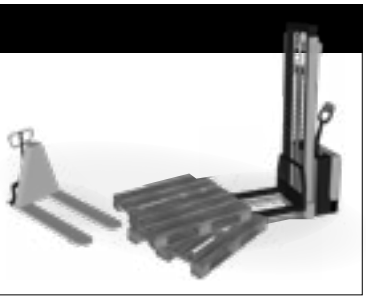

Recommended Toolbox Tools

Utility knife



Ratchet
- with socket extension
- with socket 8 mm
- with socket 17 mm



Wrench
- With 14 mm (steam option)



Cordless screwdriver
- With bit socket
- With bit PH2
- With socket holder
- With socket 8 mm



Needle-nose pliers



Spring puller



Screwdriver
- PH2
- Flat 4



3.1 Oven Assembly

Information About Casters:

- Casters are not intended for transportation purposes. Their intended use is limited to small movements for easier access during cleaning, maintenance, and service.
- Ovens with 1–4 decks are supplied with casters as standard; ensure they are unlocked before installing the legs.
- Five-deck ovens are not supplied with casters as standard but are available as an optional accessory **(page 20)**.

Important!

To ensure proper safety and performance, prepare in advance of installation by reading and understanding the **Preparation** section (page 8).

Installation requirements for your chosen oven:
For requirements specific to your oven model, voltage, and selected options, refer to the **Technical Specification**.

Download Technical Specification →



The oven is securely packed for safe transportation.
Do not drop the oven or allow it to be subjected to impact.



Required handling equipment:
- Two standard pallets (minimum)
- Suitable lifting equipment (manual lift, pallet truck, forklift, or material lift) – depending on oven size and weight



DO NOT carry the oven by the door handle or the oven vent knobs.

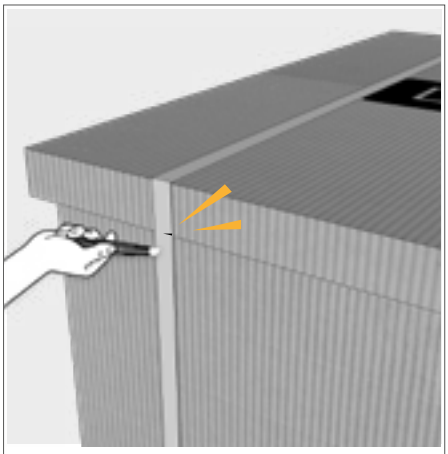

1. Cut the packing bands and remove the top and side cardboard panels.

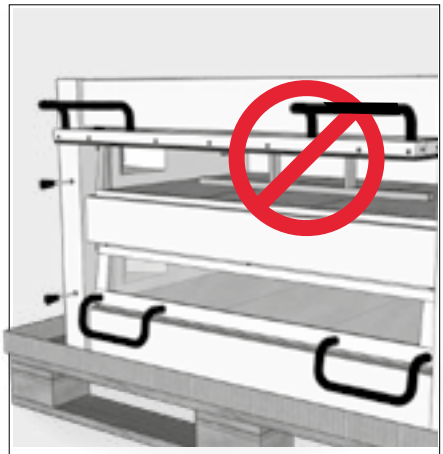

2. **DO NOT** remove the wooden stone supports until the oven is installed.



3. Carefully remove accessories.

Installation steps for 1 or 2 deck ovens.



1 or 2 Deck Ovens:
Continue to follow steps 4 to 14.

Installation steps for 3 or 4 decks

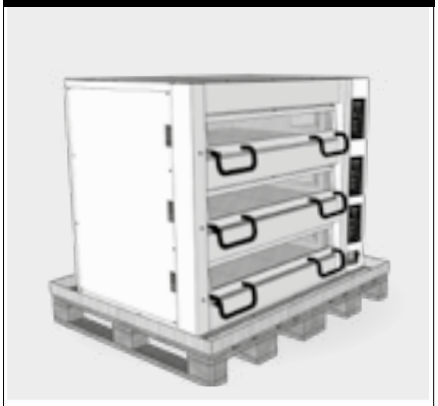

3 or 4 Deck Ovens:
Continue to follow **steps 15** to **19**.

Installation steps for 5 decks ovens.



5 Deck Ovens:
Continue to follow **steps 20** to **24**.

Installation steps for 1 or 2 deck ovens.

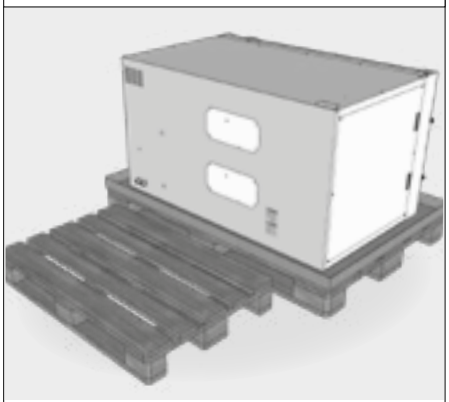

4. Place a pallet behind the oven.

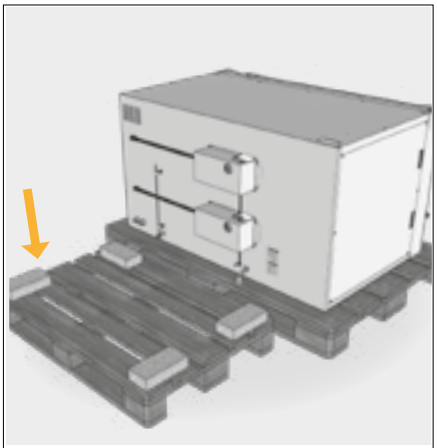

5. If the oven has a steam system, place wooden blocks to support the oven in a raised position.

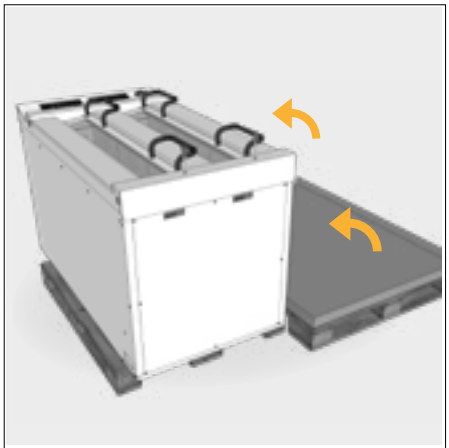

6. Turn the oven so the back side is facing down, and ensure the stones have not shifted.

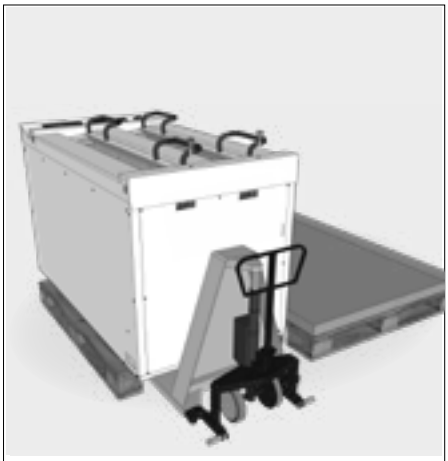

7. Use a pallet truck to move the oven through doors or narrow spaces. Transport carefully to avoid tipping or impact.

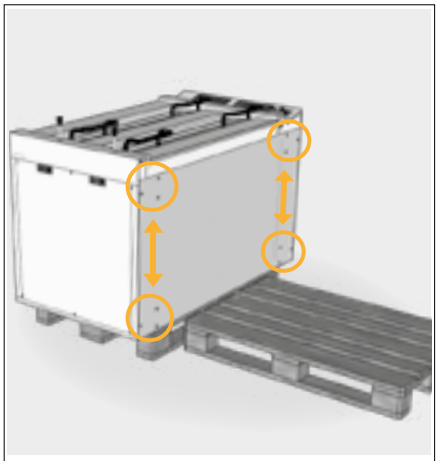

8. Place a vertical pallet, ensuring it does not block the leg bolt holes on the bottom of the oven.



9. Verify that the lifting device can raise the oven high enough for leg installation (**Steps 13–14**).



10. Add additional pallets to reach the required height..

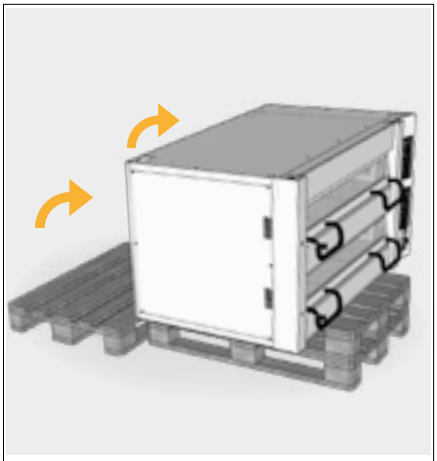

11. Rotate the oven upright without impact.

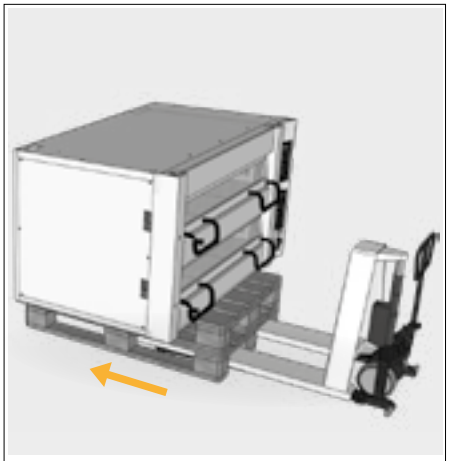

12. Position the lifting device in front of the oven.



13. Lift the oven high enough to install the legs.



14. Continue to **step 24** for leg installation.

Installation steps for 3 to 4 decks ovens.

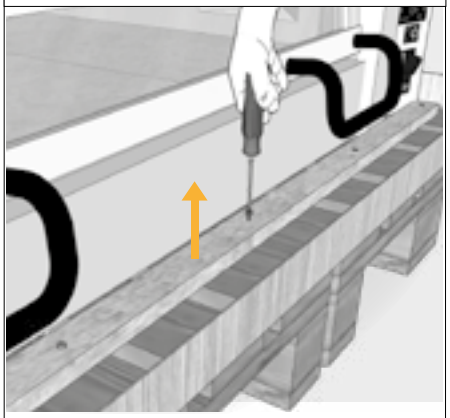

15. Remove the front and back wooden piece.

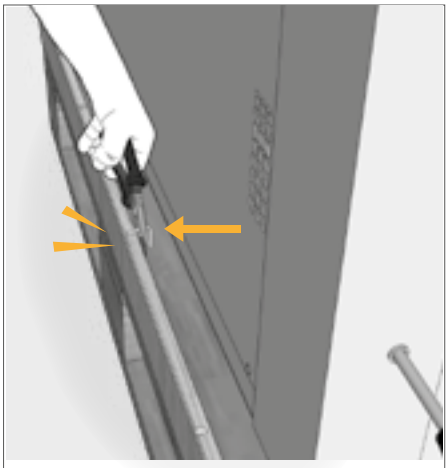

16. Remove staples from one side of the packaging.

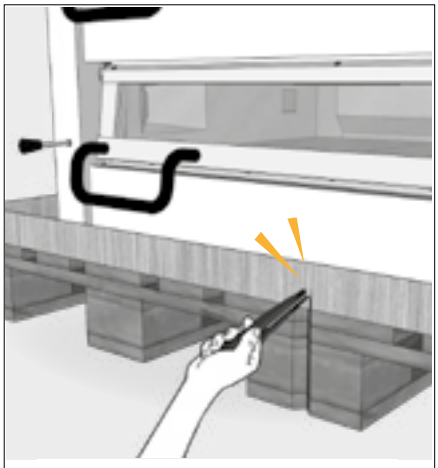

17. Cut the cardboard between each pallet.



18. Push and center the oven securely over the largest pallet, then remove the other pallet(s).

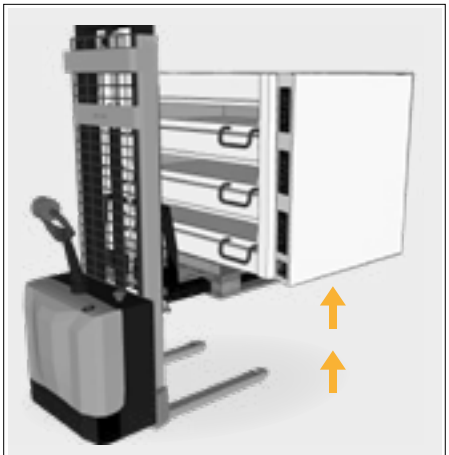

19. Carefully lift the oven using a pallet truck, forklift, Genie lift (USA), or suitable lifting device depending on oven weight. (Continue to **step 24**).

Installation steps for 5 decks ovens.

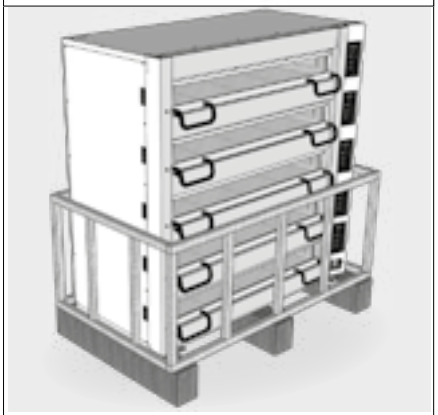

20. Remove the cardboard.

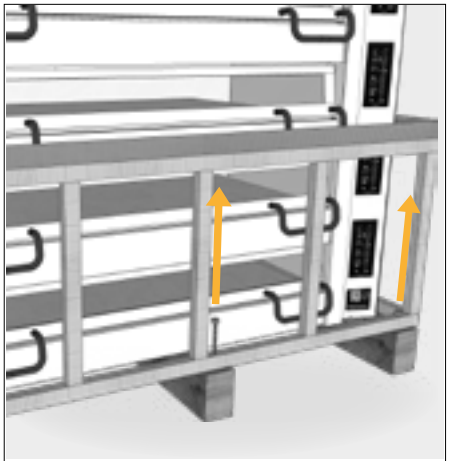

21. Remove the hex bolts and take off the wooden crate.



22. Carefully lift the oven using a pallet truck, forklift, Genie lift (USA), or suitable lifting device depending on oven weight.

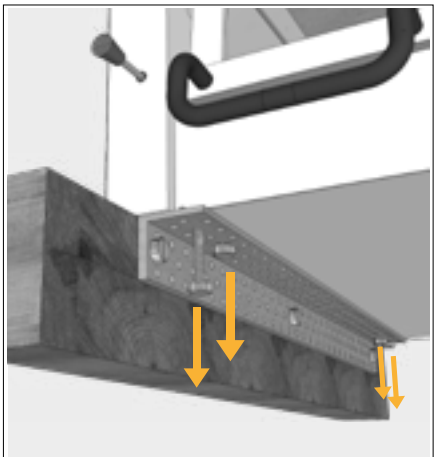

23. Remove the eight hex bolts (M10 × 30) under the oven and retain them for installing the legs. (Continue to **step 24**).

Leg installation

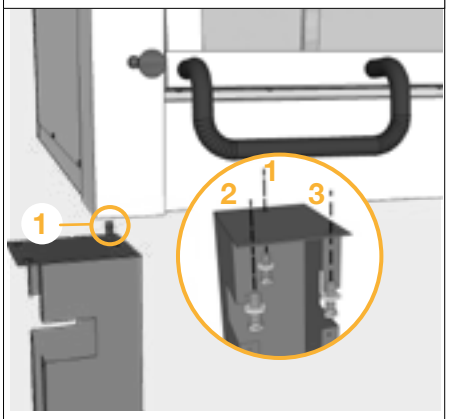

24. Use three bolts (M10 × 30) and three washers per leg (provided). Rotate the leg 180° outward to place the inside bolt first. IMPORTANT: Use only the provided M10 × 30 mm bolts. (**1**), (**2**), (**3**)

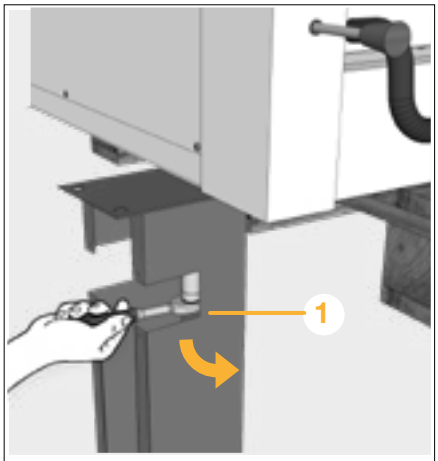

25. Loosen the bolt and rotate the leg 180° (**1**).

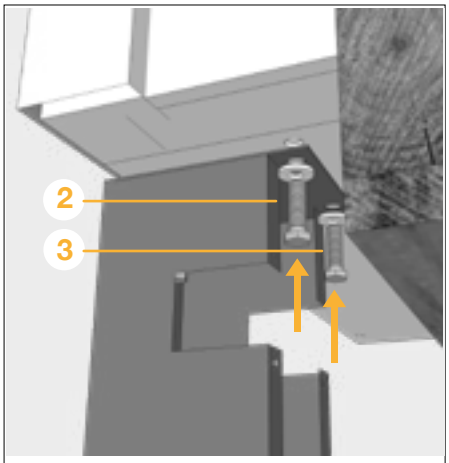

26. Tighten the bolts alternately. Hand-tighten all bolts first. (**2**), (**3**)



27. Verify that all the legs are firmly and properly adjusted.

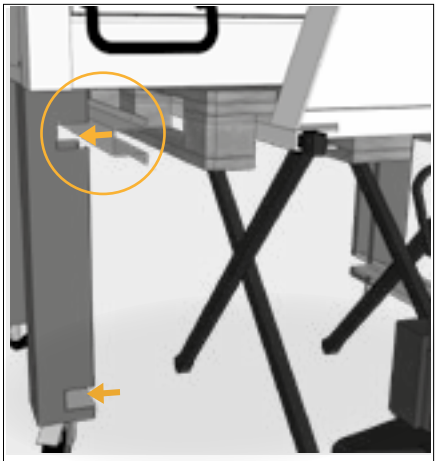

28. DO NOT remove the lifting device before fixing the shelf guides.



29. Place all four shelf guides.

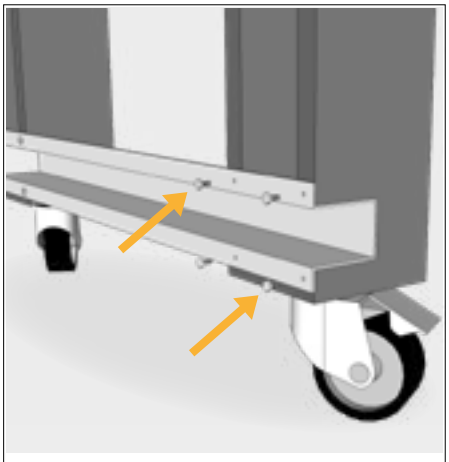

30. Secure the shelf guide with 8 pcs of hexagonal screws per guide (provided).

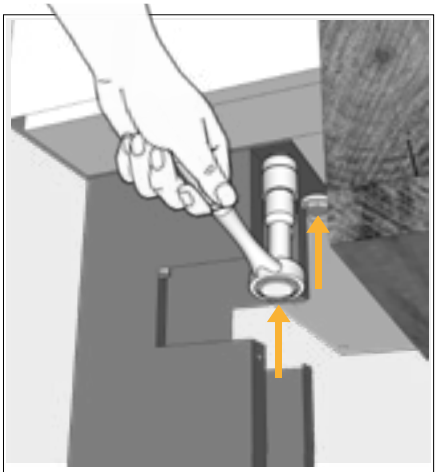

31. After tightening all guides, ensure all bolts securing the legs are fully tightened, then remove the lifting device.



32. Insert the sliding shelf into either the upper or the lower pair of guides.*

**1–3 deck ovens are supplied with one shelf as standard; a second shelf is available as an option. 4–5 deck ovens are not supplied with a shelf as standard, but one can be ordered as an option.*

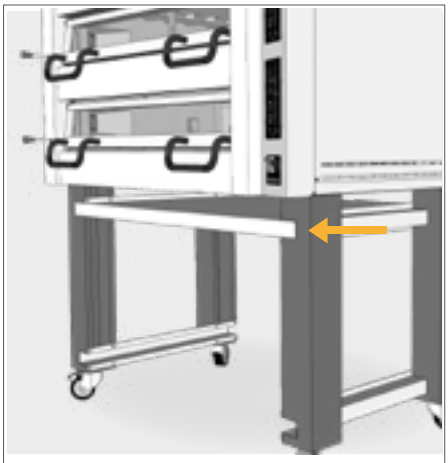

33. For correct installation of the shelf blockers, align the shelf with the front of the legs. Install the shelf blockers on the backside of each front leg using the provided self-tapping screws.

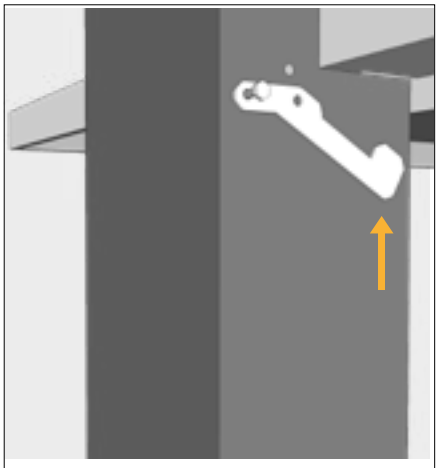

34. Use 2 pcs self-tapping screws per blocker (provided).

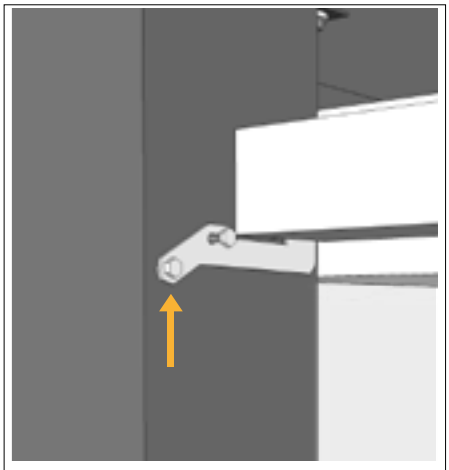

35. Fit the shelf blocker and repeat on the other front leg.

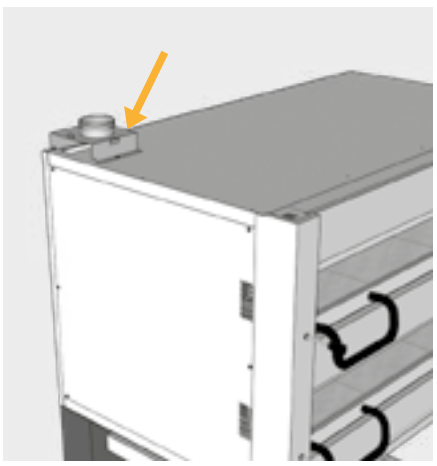

36. Attach the back flue diverter using three self-tapping screws (wafer head, provided).

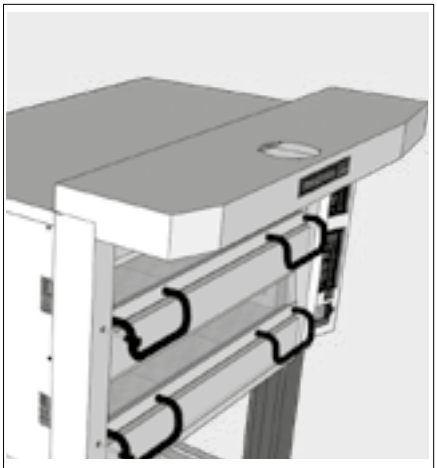

37. Place the eyebrow hood piece and hold it in position while securing the screws (see **step 38**).

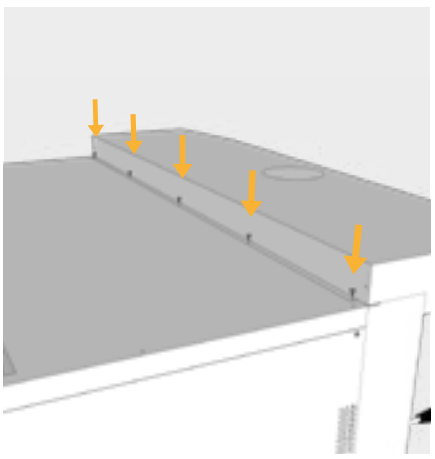

38. Fix the Eyebrow hood with self-tapping screws (wafer head).



39. Place the ventilation duct through the hood. The edge of the ventilation duct must be on the underside of the hood.



40. Secure with four bolts and nuts (provided), placing the nuts on top.

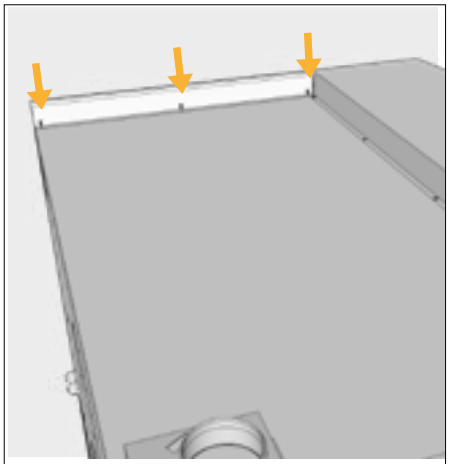

41. Fix the side top panels using the provided self-tapping screws (wafer head).

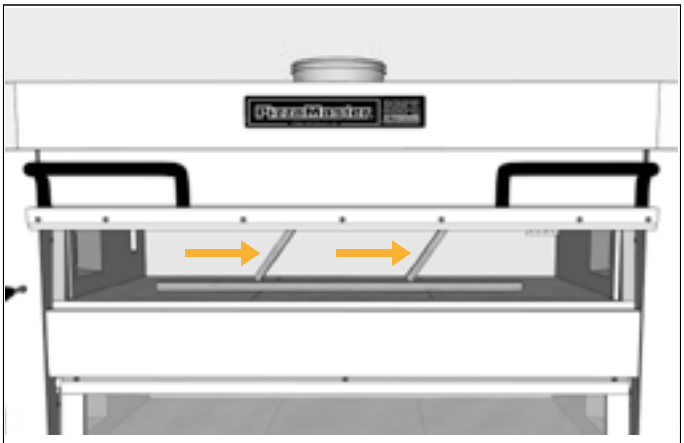

42. Remove the wooden stone supports by pushing the vertical supports to the side.

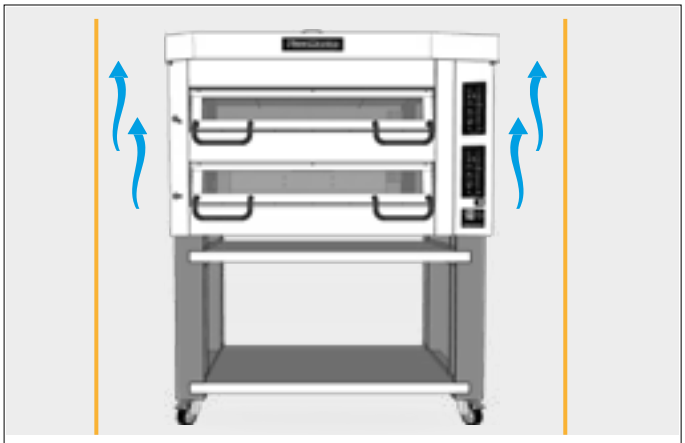

43. For ventilation purposes, position the oven with at least 50 mm (2 in) of clearance between the oven and any adjacent wall.

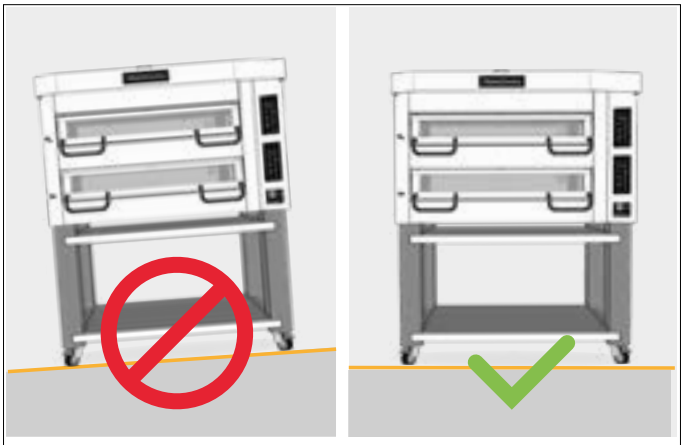

44. Position the oven over a flat floor, so the oven is horizontal and stable.

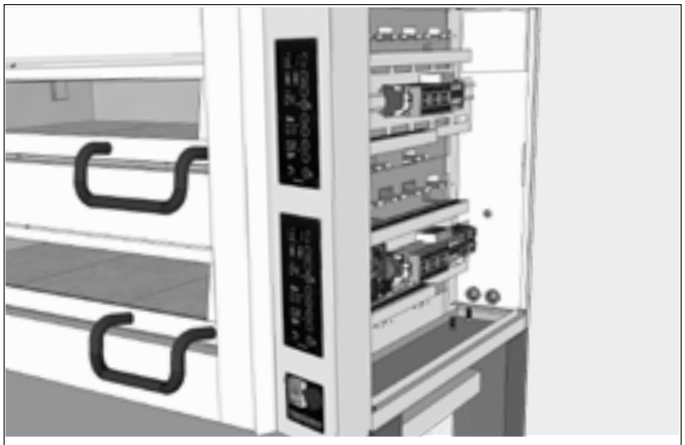

45. If possible, position the oven with easy access to the right-hand panel to facilitate the electrical installation and future services.

Congratulations!

Your PizzaMaster oven is now assembled.
Refer to the Quick Start Guide before first use.

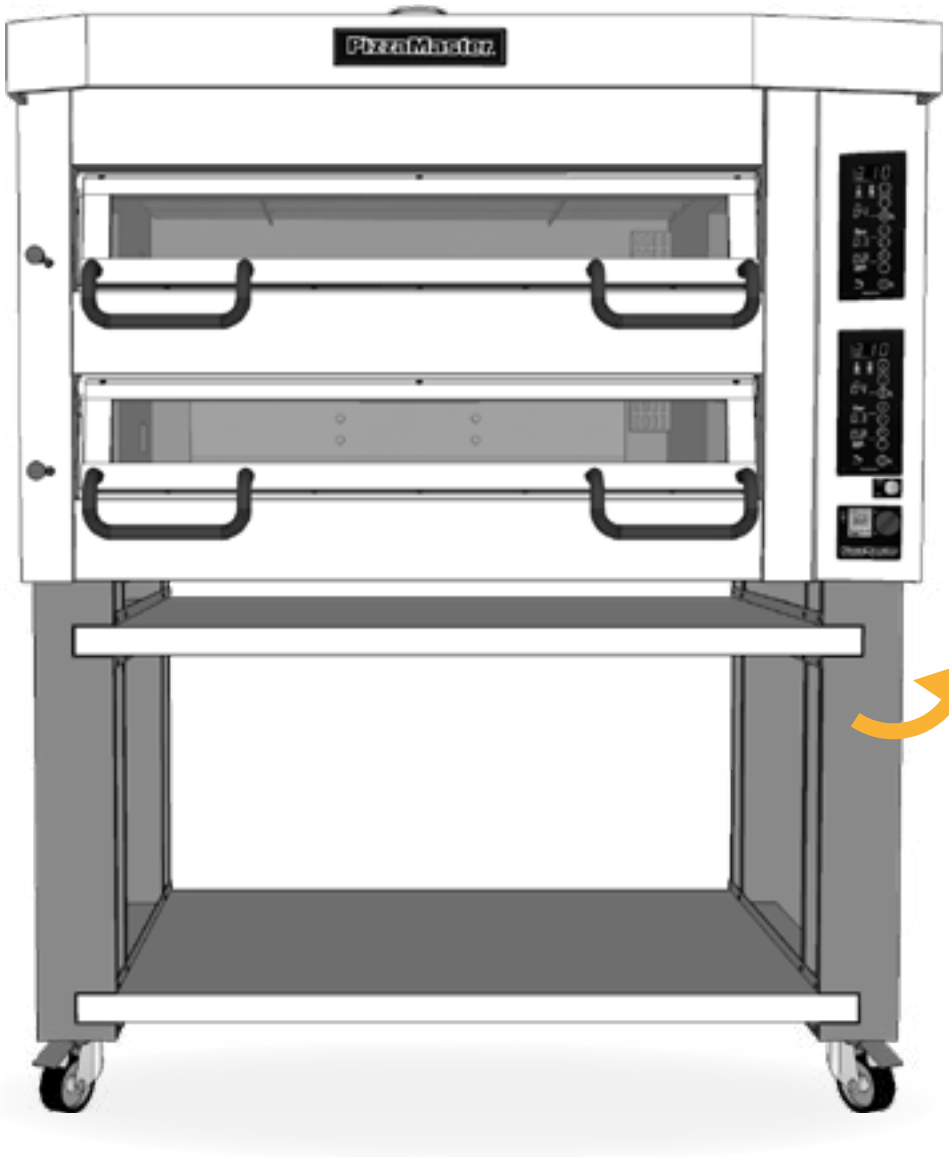

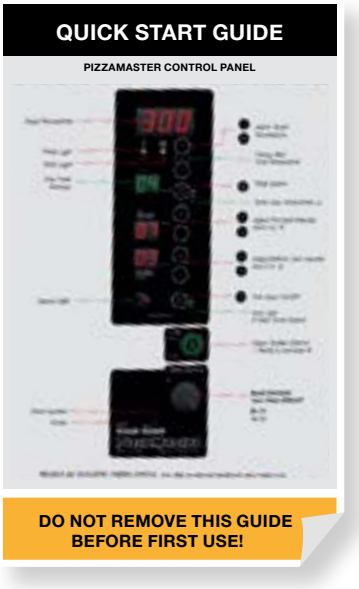

DO NOT remove the ”Quick Start Guide” from the handle before first use.

Quick Start Guide, video →

3.2 Assembly Options

PizzaMaster offers a range of optional features, some of which require assembly. Review the instructions for each option carefully to ensure proper installation and safe operation

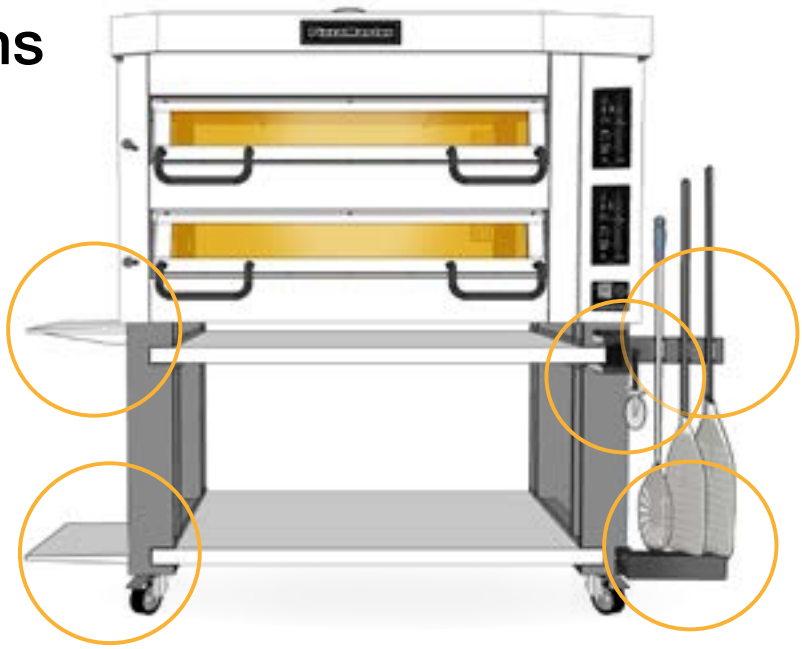

3.2.1 Oil and Spice Rack (includes Pizza Cutter)

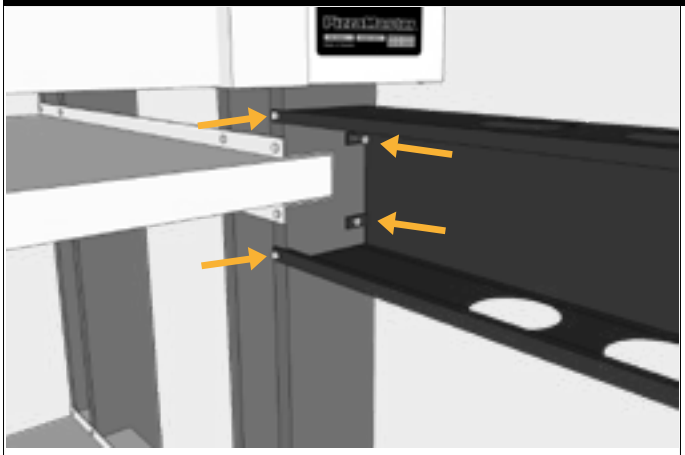

1. Install the oil & spice rack using the four self-tapping hex screws (provided).

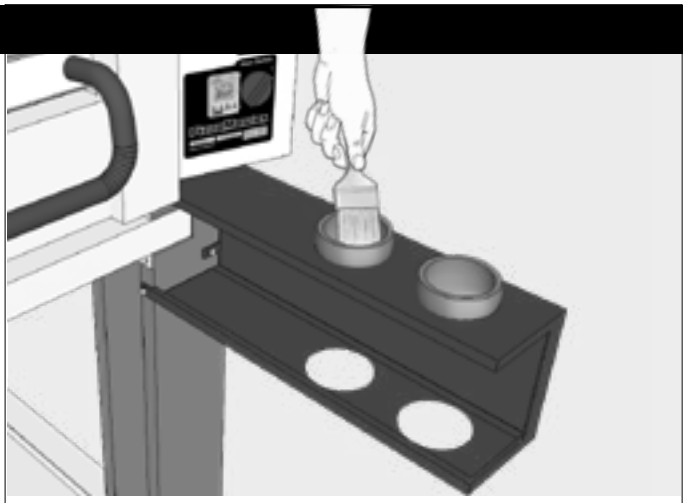

2. Place the oil bowl, spice bowl, and basting brush into the holder.

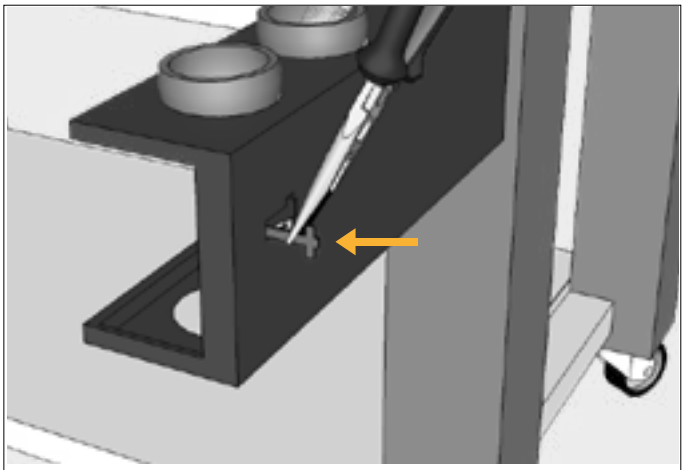

3. Carefully fold out the lug (as shown in the illustration).

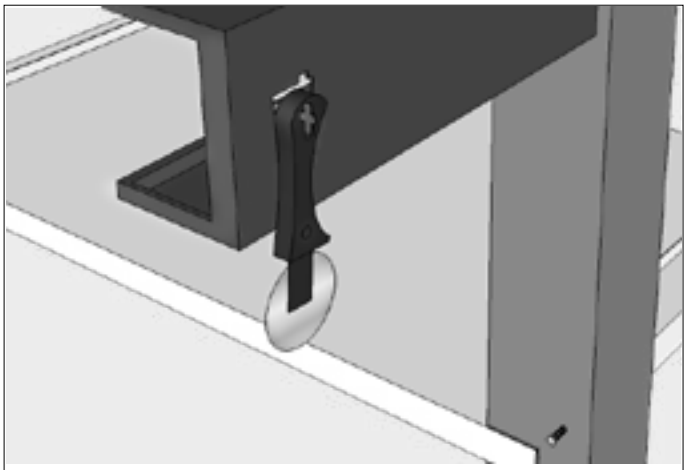

4. Hang the pizza cutter (provided) on the lug.

3.2.2 Pizza Tool Holder

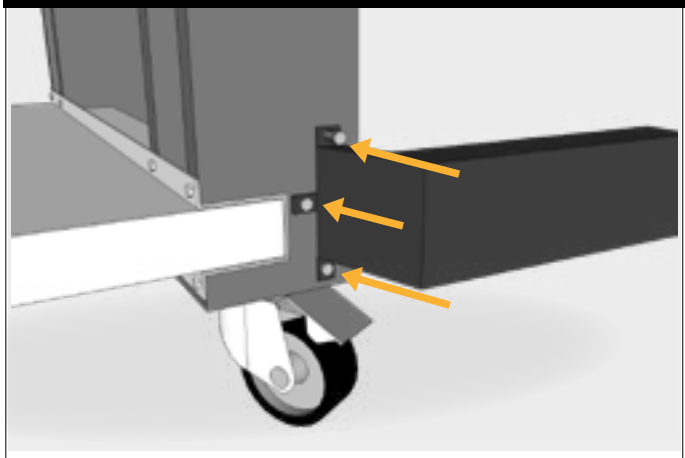

1. Fit the lower bracket using three hexagonal self-tapping screws (provided).

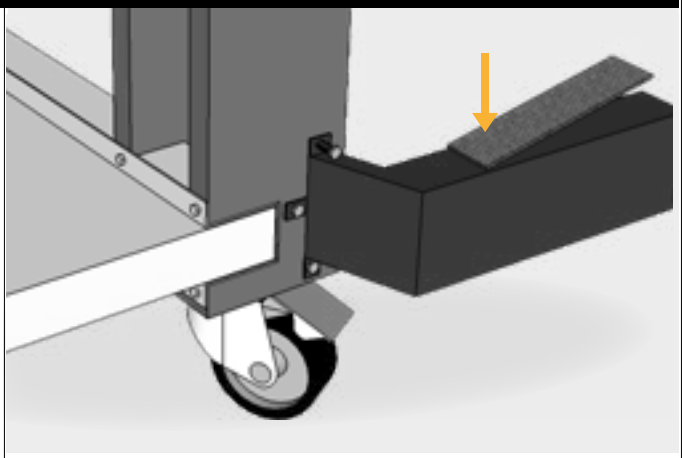

2. Peel off the backing from the soft pad and stick the pad to the lower bracket (as shown in the illustration).

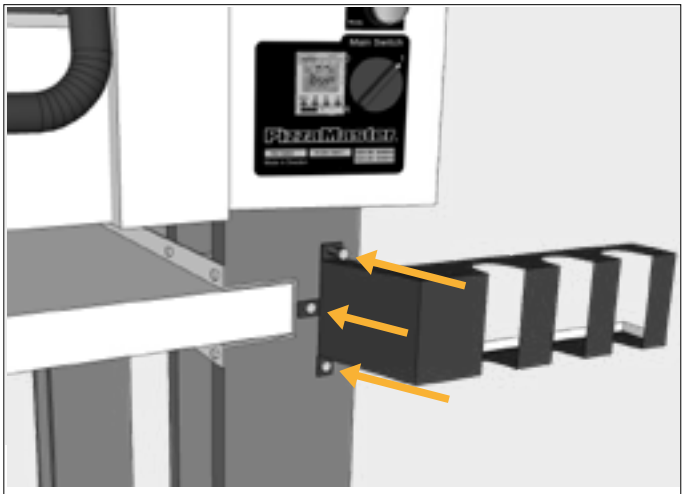

3. Fit the upper bracket using three hexagonal self-tapping screws (provided).

3.2.3 Fixed Unloading Shelf on 4-Deck Oven

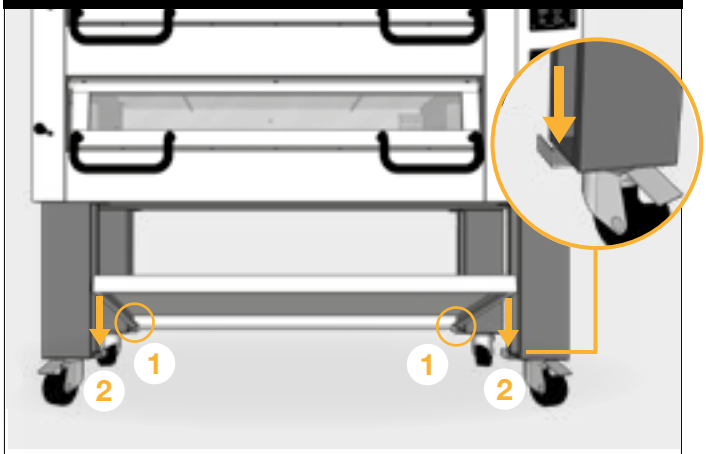

1. There are four pre-assembled brackets (one for each leg) on which the shelf will rest. Place the back side of the shelf first (**1**), then carefully lower the front side (**2**) until the shelf rests on all four brackets.

3.2.4 Side Shelf

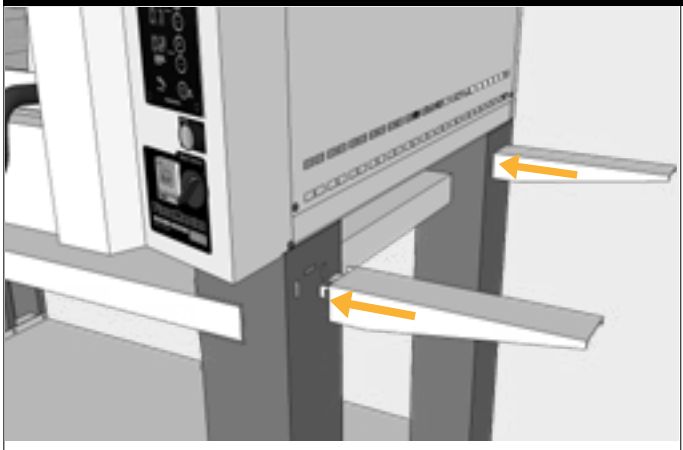

1. Hook the two brackets onto the legs.



2. Mount the shelf.

3.2.5 Lockable Casters for 5-Deck Ovens



Warning!

- Casters are intended for short repositioning only (cleaning, maintenance, service). **Do not** use casters for transportation or for moving the oven over long distances, uneven surfaces, or thresholds.
- Casters for 5-deck ovens must be installed with adapter plates and cannot be used in combination with oven legs.

Information!

- Casters can be added as an option for 5-deck ovens and must be installed with adapter plates instead of legs.
- Before installing the adapter plates with casters, review the correct orientation of the adapter plates in the pictures below.



Top plates must face the bottom of the oven as shown in the picture above.

- Each adapter plate assembly consists of three parts per corner:
  - Top plate
  - Bottom plate
  - Caster

Download Technical Specification →



Bottom plates must face the bottom of the oven as shown in the picture above, and all weld nuts must face the oven.

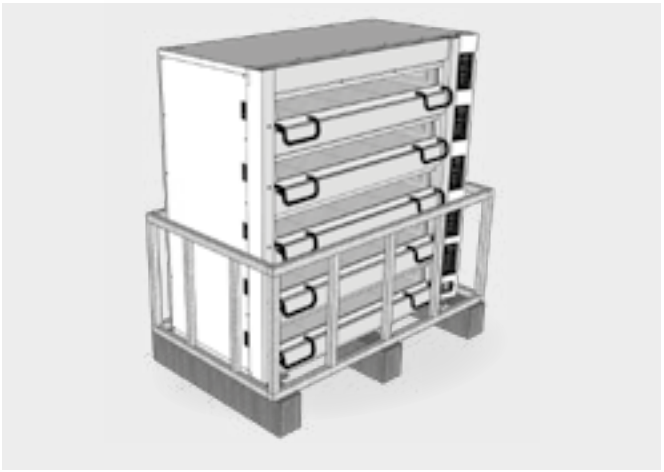

1. Remove the cardboard.

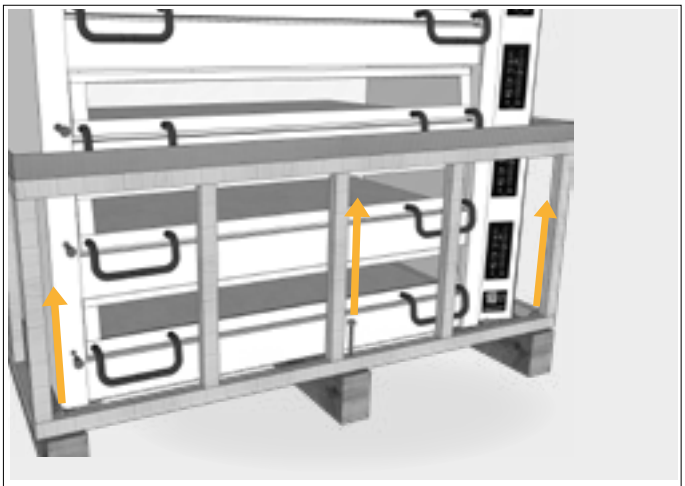

2. Remove the hex bolts and take out the wood cage.



3. Carefullly lift the oven using a pallet truck, forklift, Genie lift, or similar suitible lifting device depending of the weight of the oven.

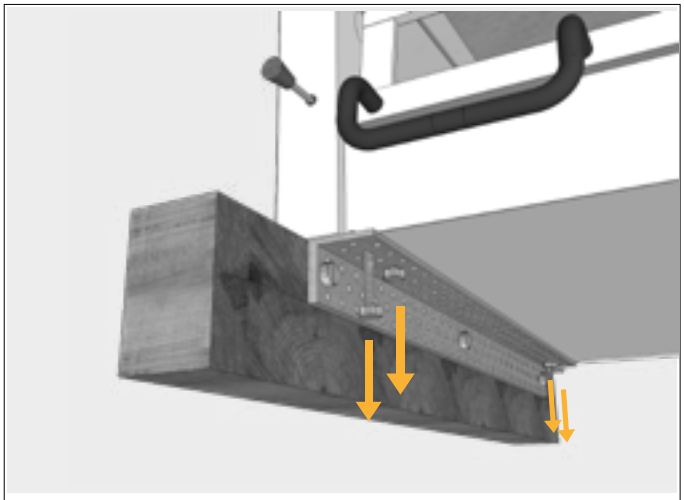

4. Remove the eight hex bolts (M10 × 30) under the oven and retain them for installing the legs.

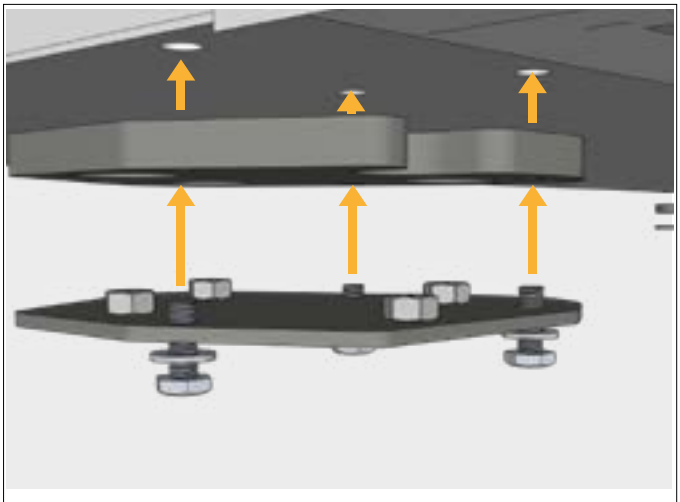

5. Fix both adapter plates to the oven using three M10 bolts with washers (provided).

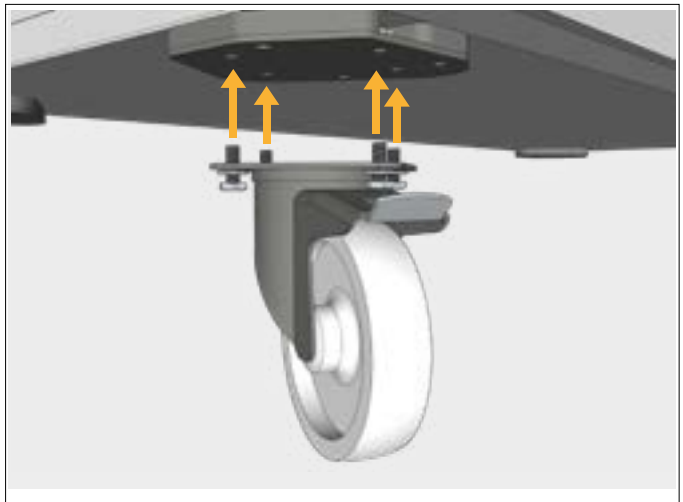

6. Fix the casters to the adapter plates using four M12 bolts with washers (provided).

3.2.6 Oven with spacers

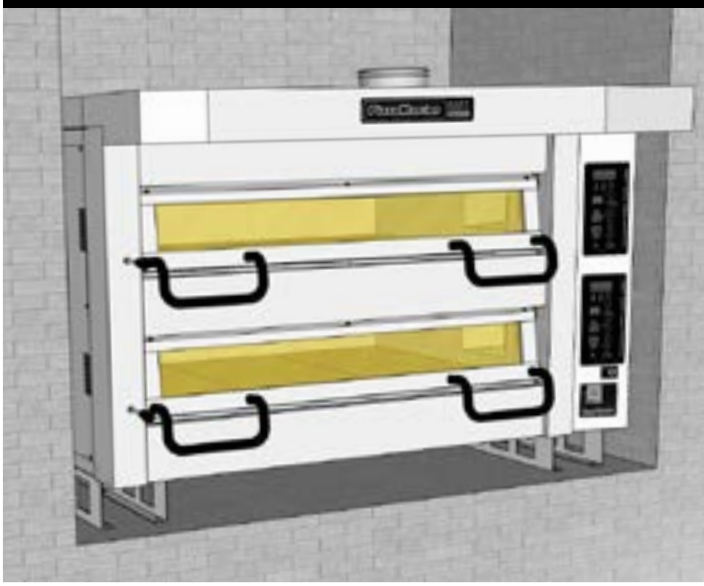

Information!

Contact PizzaMaster support in advance of installation to ensure correct spacer measurements and leveling requirements.

Electrical supply may need to be installed prior to final placement, depending on access. See **Installation – Electrical Connection**, starting on **page 30**.

Leave a minimum of 50 mm (2 in) of clearance between the oven and any adjacent wall. Spacer height: 125 mm (5 in).

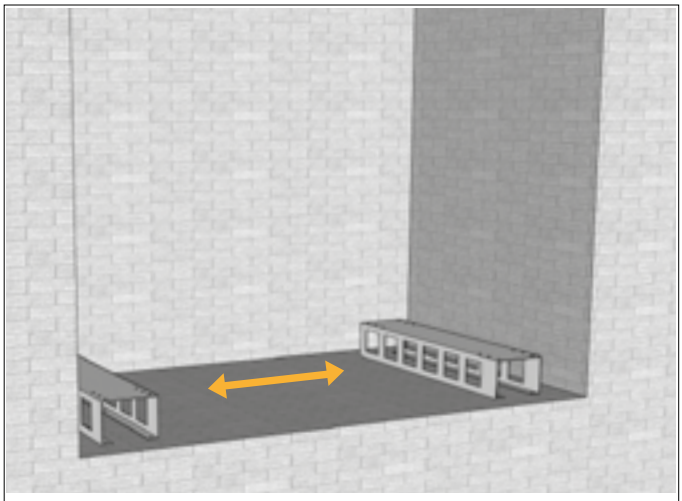

1. Place the spacers on the designated surface.

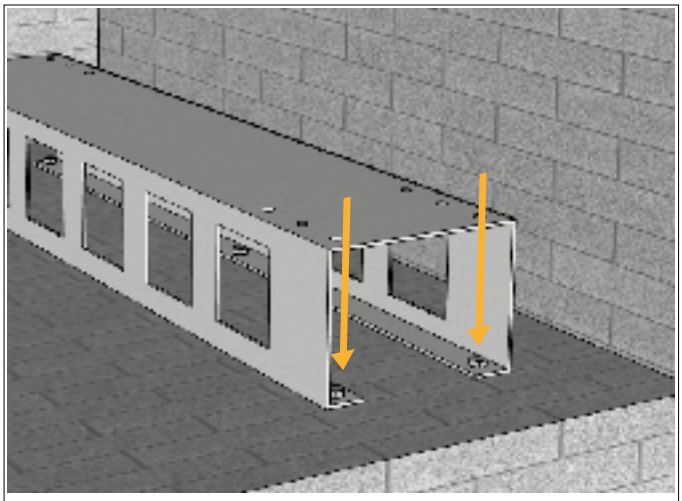

2. Fix the spacers to the surface with suitible screws depending on surface type.

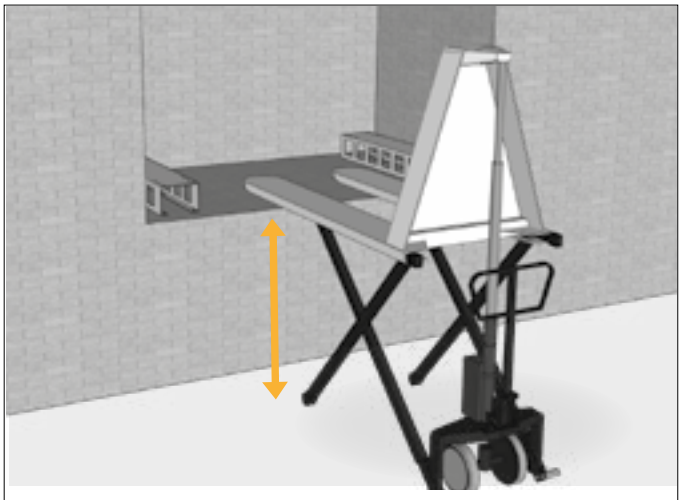

3. Use a suitable lifting device (pallet truck, forklift, Genie lift, or similar). Verify that the device can clear the spacer height and remain stable.

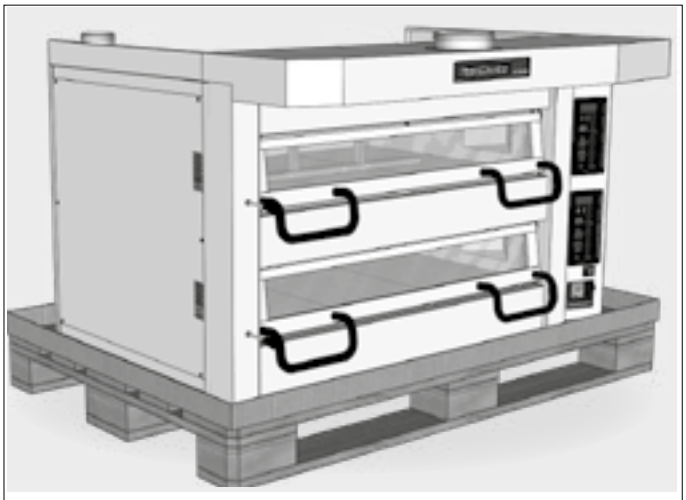

4. Attach the roof components according to the instructions on **page 15**. Then continue with steps **36 to 41**.

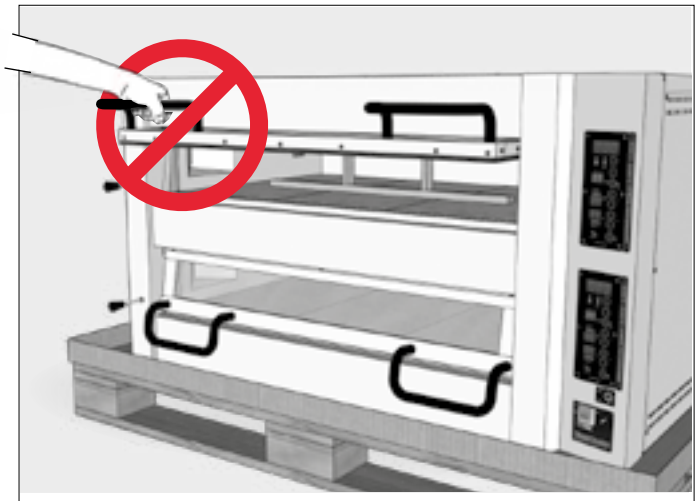

DO NOT use the oven door handles or the oven vent knobs to lift the oven, as this may cause damage.

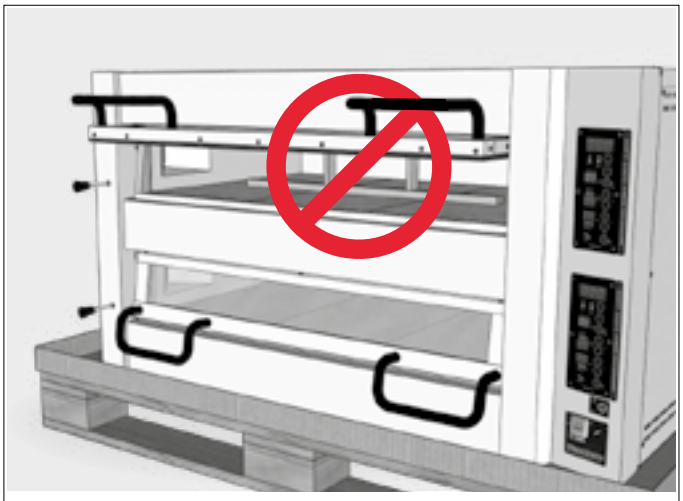

DO NOT remove the wooden supports for the hearthstones before oven has reached final placement.

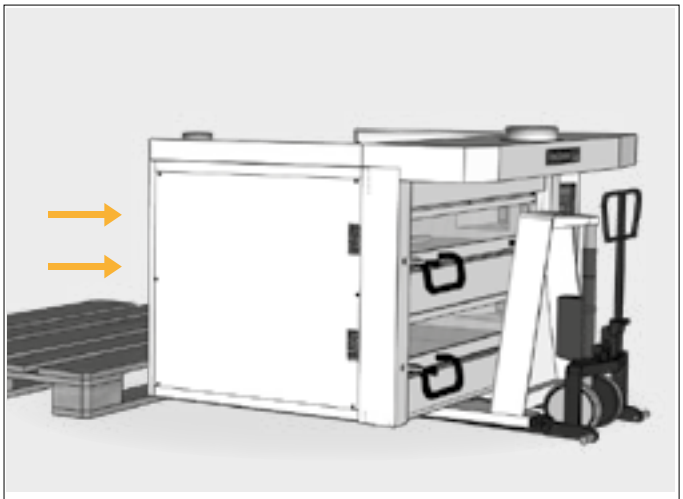

5. Carefully push the oven on top of a lifting device.

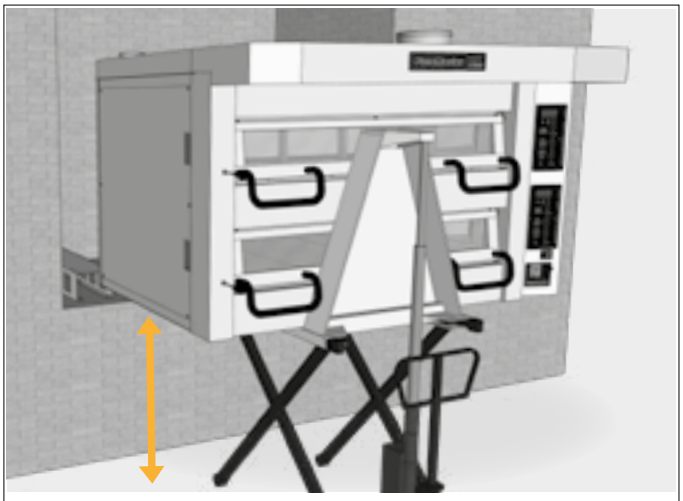

6. Lift the oven to a height above the spacers.

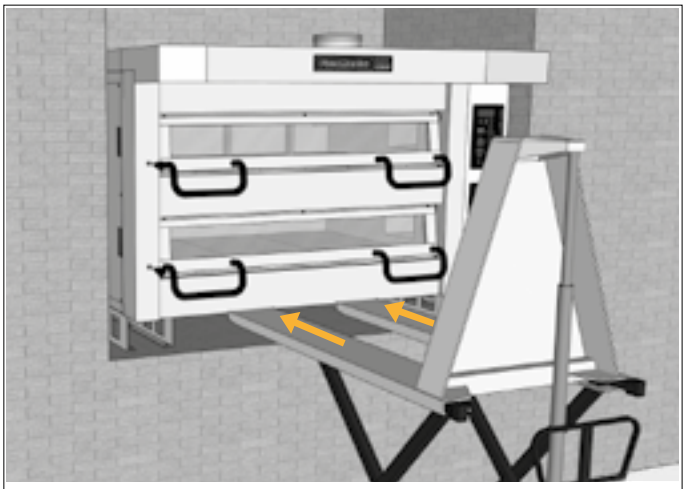

7. Carefully push the oven on top of the spacers.

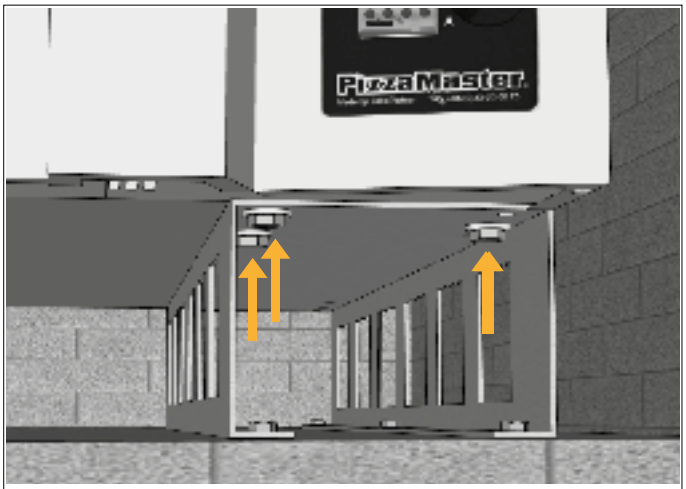

8. Secure the oven to the spacers using six M10 × 30 bolts with washers (provided), three per side. Hand-tighten first, then torque once the oven is leveled.

3.3 Disassembling 3/4/5-Deck Ovens

(2-deck ovens are non-separable unless ordered with the optional "Disassemble Design for 2-Deck Oven")



Oven decks can be separated to facilitate installation through narrow doors, hallways, stairways, or other restricted spaces. 2-deck ovens generally pass through standard doorways when tilted onto their back. Do not remove the fixing point between Deck 1 and Deck 2 when tilting the oven (see Step 44). This chapter provides supplementary instructions to the standard installation procedure.

Before beginning these steps, carefully read:

- Safety Precautions and Warnings (**pages 6**–7)
- Preparation (**page 8**)
- Installation – Assembly (**pages 10–17**)

Important!

If disassembling the steam package (option), apply thread seal tape when reconnecting the solenoid valve package and drain system on the brass tubes (**refer to step 28**).

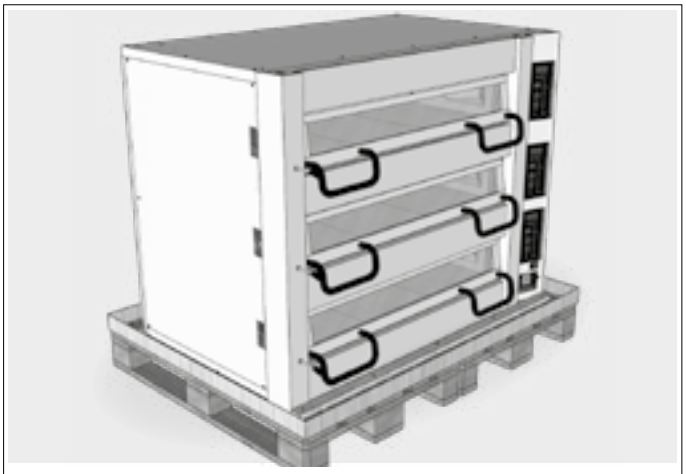

1. Unbox the oven and remove the accessories. See detailed information on pages **6 and 7**.

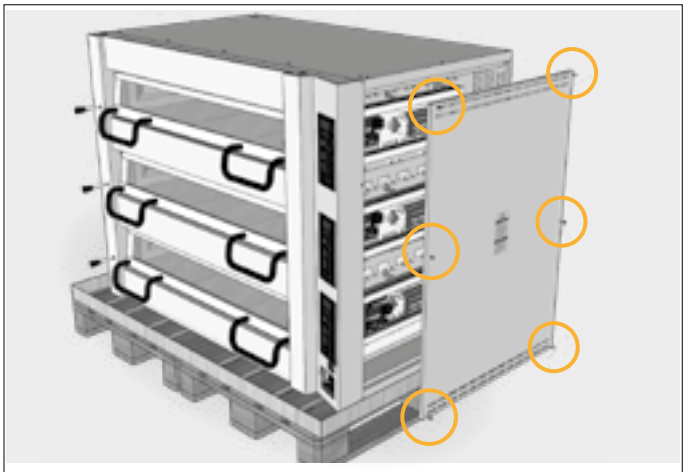

2. Remove the screws that secure the right-hand side panel, then remove the panel.

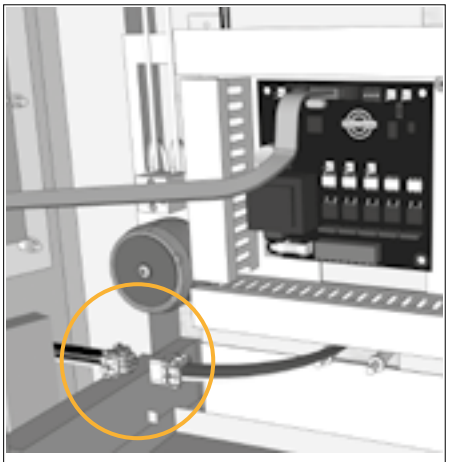

3. Disconnect the Control Voltage connector (X106).

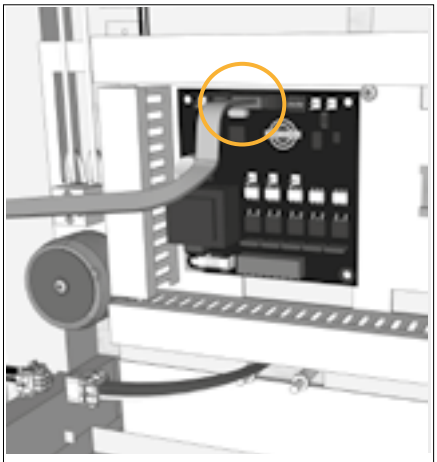

4. Disconnect the display cable from the PCB (one per deck).

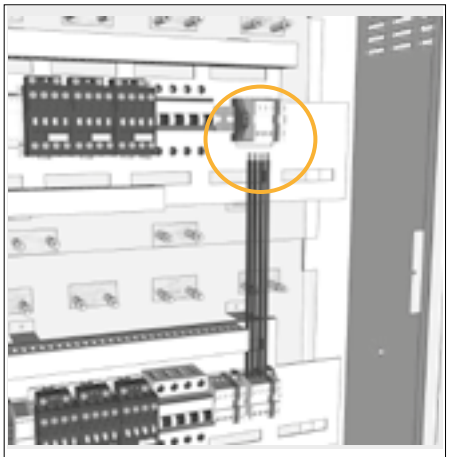

5. Disconnect power supply cables between decks.

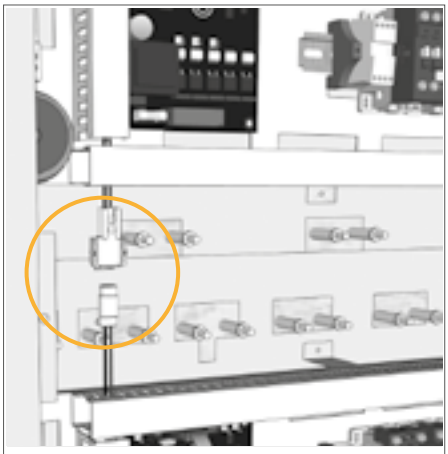

6. Disconnect control cables between decks.

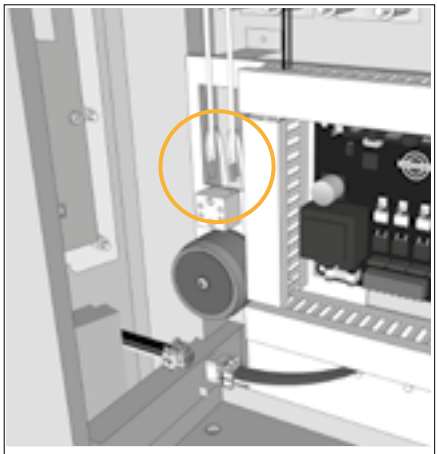

7. Disconnect light cables between decks.

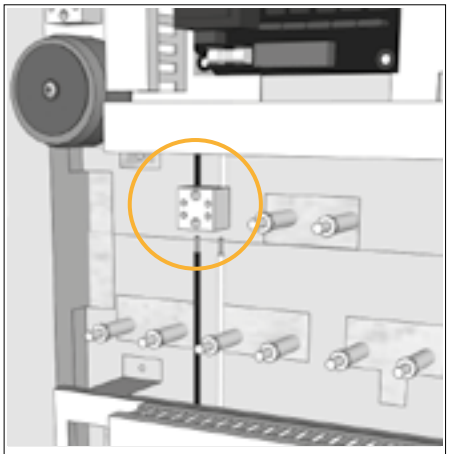

8. If oven is equipped with optional 7-Day Automatic Start/Stop Timer, disconnect the cables between deck.

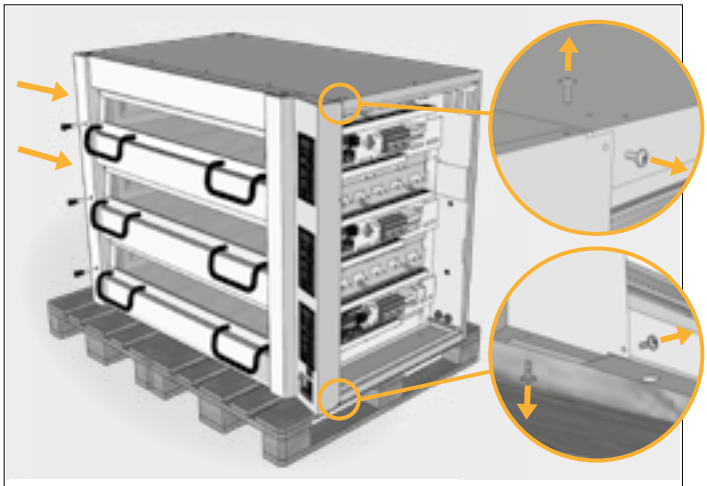

9. Remove the bottom cardboard from the pallet, then shift the oven enough to access the bottom right screw. Remove the two bottom screws and the two top screws.



10. Open the door and remove the screws on right-hand front panel (one per deck).



11. Pull out the RH-Front panel.

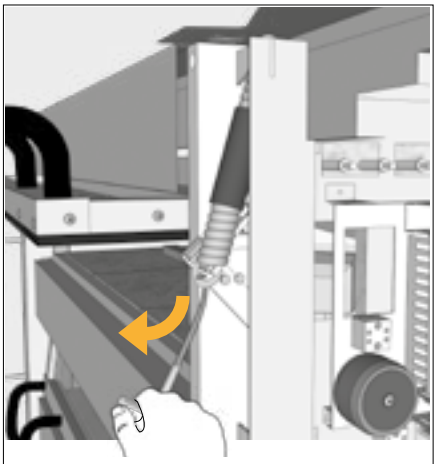

12. Disconnect the door springs (one per deck) by opening the door and using a spring puller to pull each spring downward until it is released.

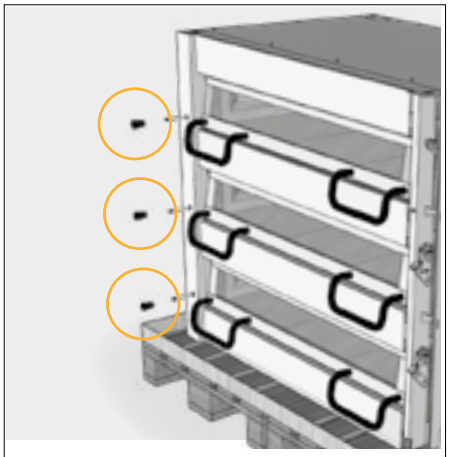

13. Remove the knobs on the vent control levers (one per deck) by rotating them counterclockwise.

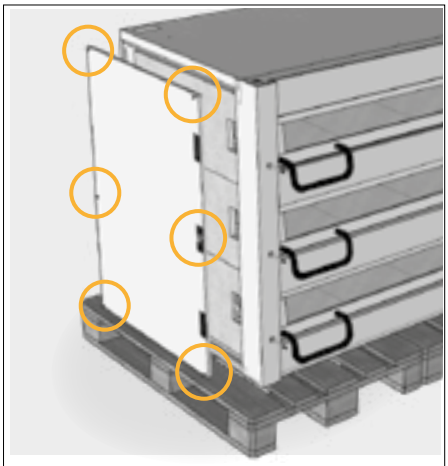

14. Remove the screws that secure the left-hand side panel, then remove the panel.

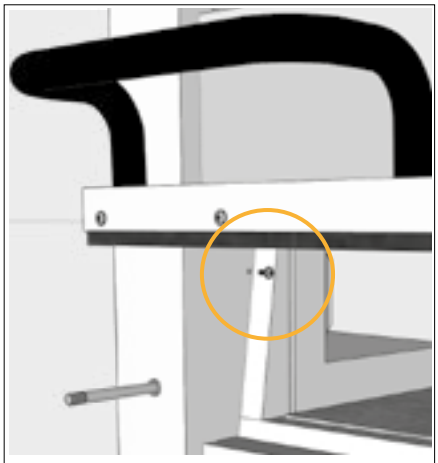

15. Open the door and remove the screws on the left-hand front panel (one per deck).

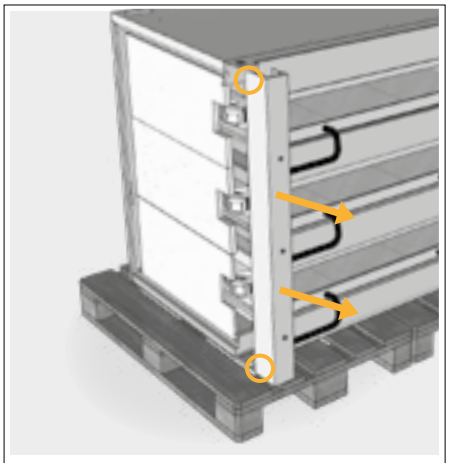

16. Remove the 2 corner screws securing the left-hand front panel, then remove the panel.

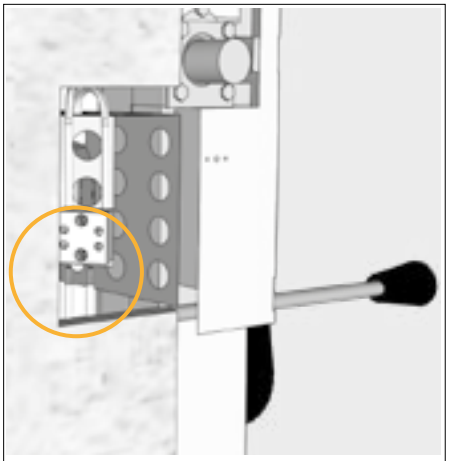

17. Disconnect the light cables between decks on left side of oven.

For oven with Steam System

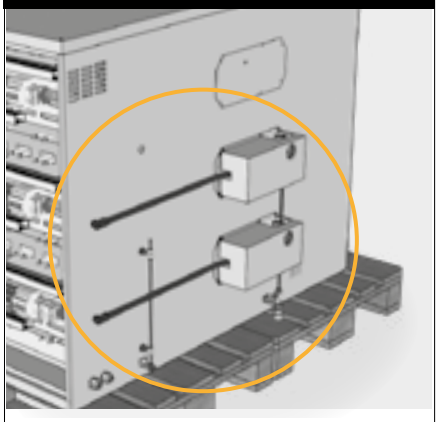

18. For ovens with the Steam System (option), continue to **Step 20**..

For oven without Steam System



19. For oven without Steam System (option), continue to **step 30**.

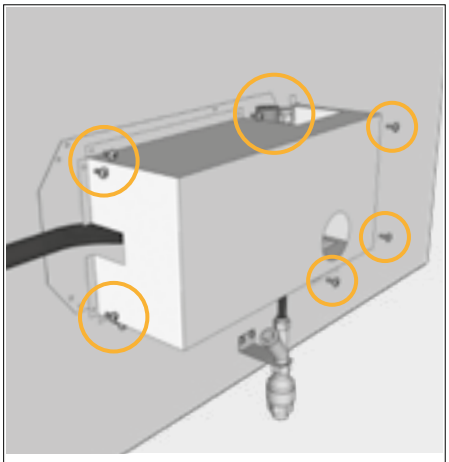

20. Remove the screws and the steam system cover (backside of oven).

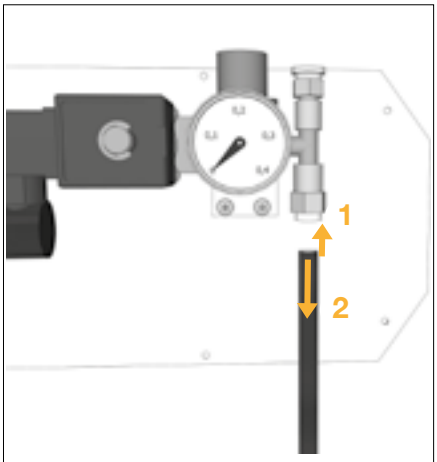

21. Remove the hose by pinching the lock (**1**) and pulling out the hose (**2**) at the same time.

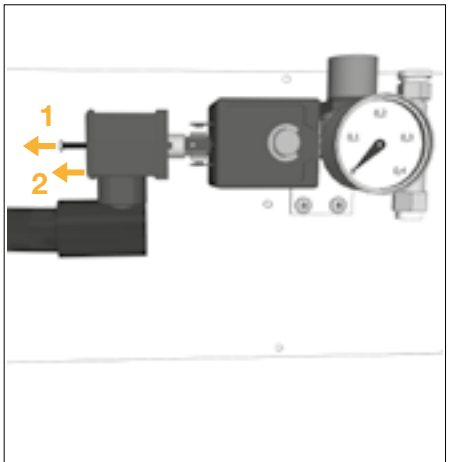

22. Disconnect the connector from the solenoid valve by first releasing the screw (**1**), then pulling out the connector (**2**)..

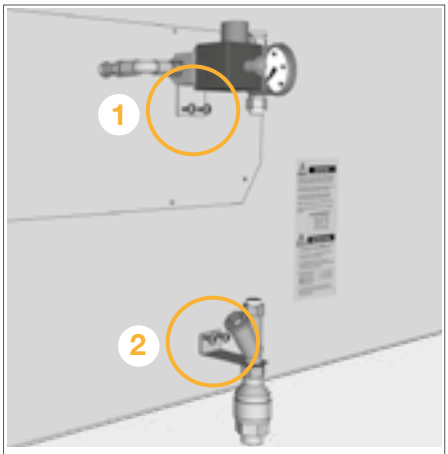

23. Remove the screws holding the solenoid valve package (**1**) and the water blocker package (**2**).

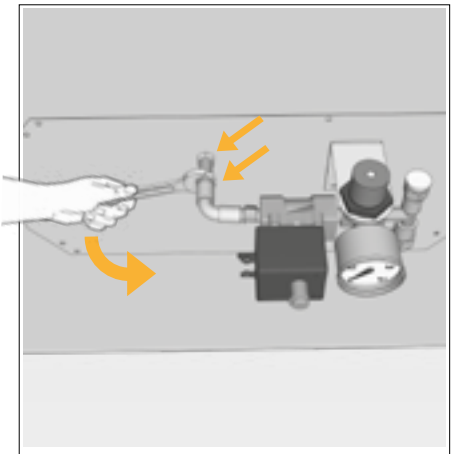

24. Loosen the nuts on the brass tube.

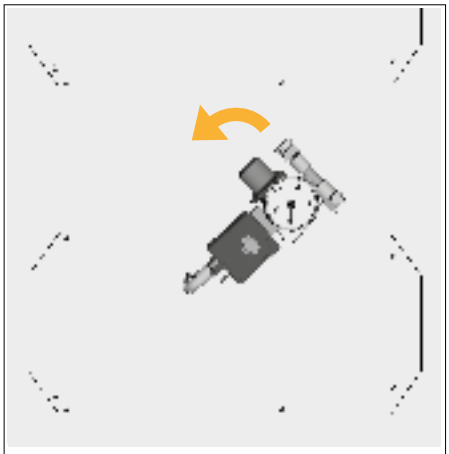

25. Rotate the steam package counterclockwise until its completely loose.

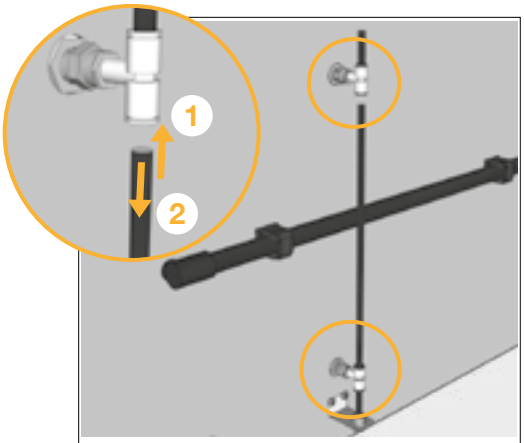

26. Remove the drain system hose between the decks. Release it by pinching the lock (**1**) and pulling out the hose (**2**) at the same time.

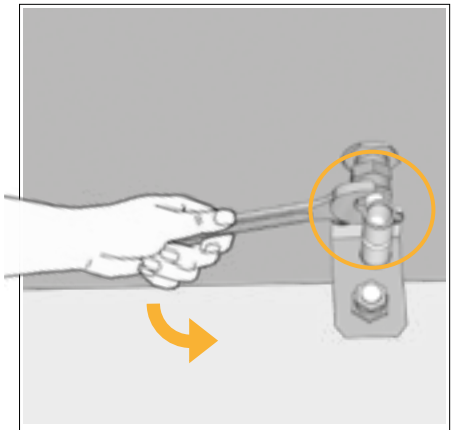

27. Loosen the nuts to remove the hose holders (one per steam deck).

Important!

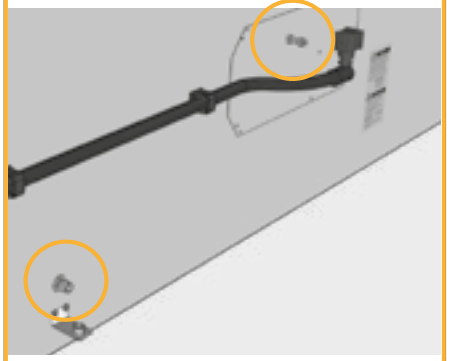

28. Thread seal tape must be applied before reconnecting the safety valve package and drain hose holders.

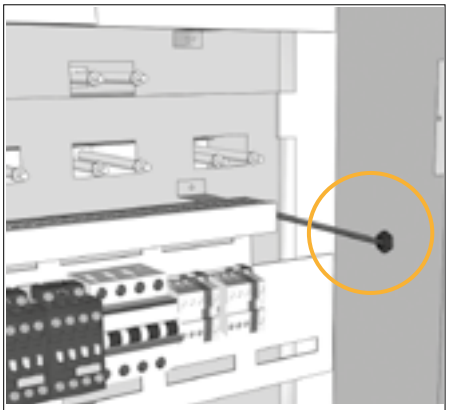

29. Disconnect the solenoid valve cables. Refer to the electrical schematic for connector positions (varies by oven model).

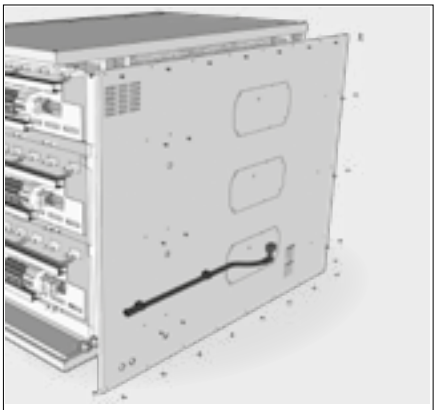

30. Remove the screws holding the back shell panel, then remove the back shell panel.

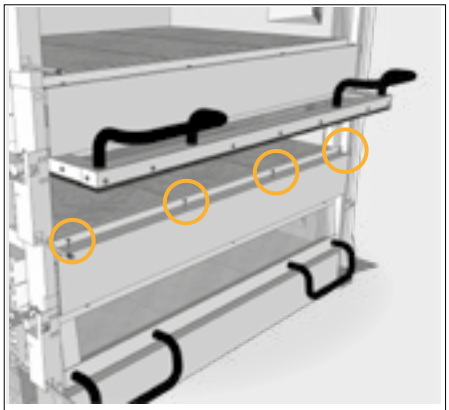

31. Open the doors and remove the top-side screws holding the front panels (one panel between each deck).

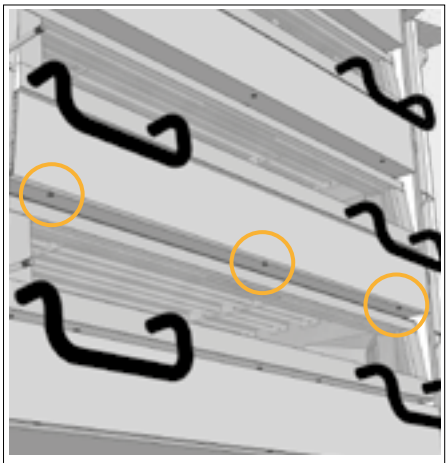

32. Remove the lower screws securing the middle front panels (one panel between each deck).

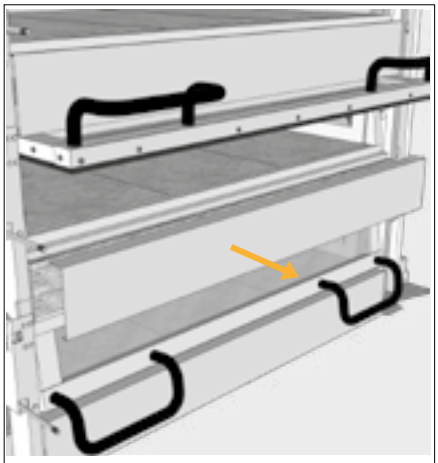

33. Remove the middle front panels.

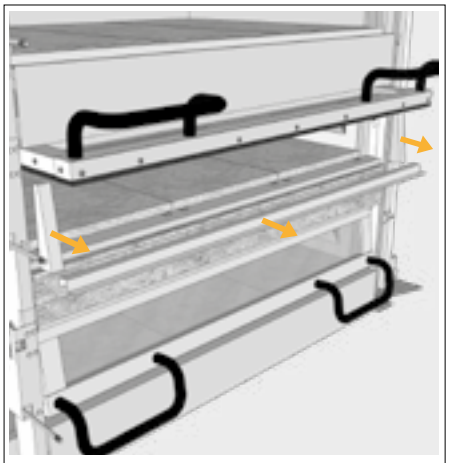

34. Remove the stone frame supports by pulling them out.

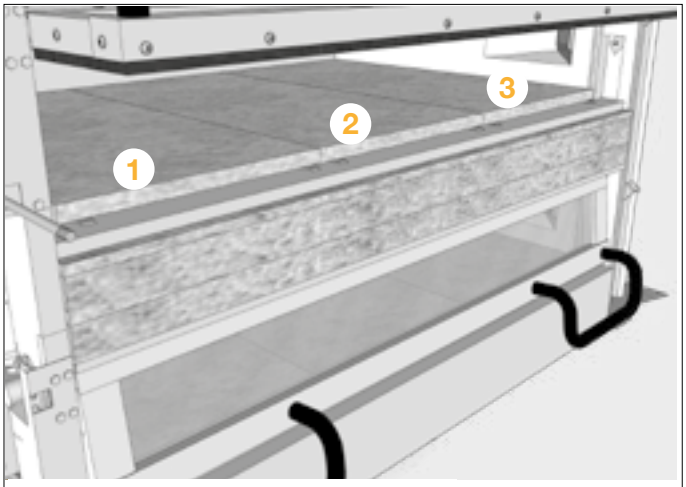

35. Mark the stones to remember their positions. For the best possible baking surface, each stone must be reinstalled in the same position in which it arrived. (**1**), (**2**), (**3**)

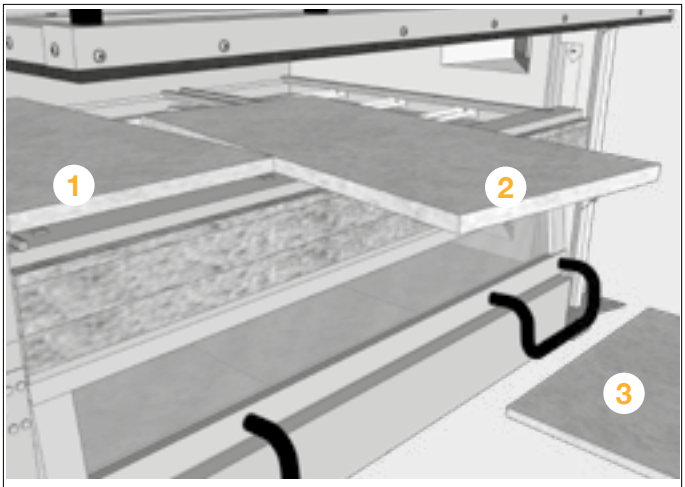

36. Remove the stones by pulling them out. (**1**), (**2**), (**3**)

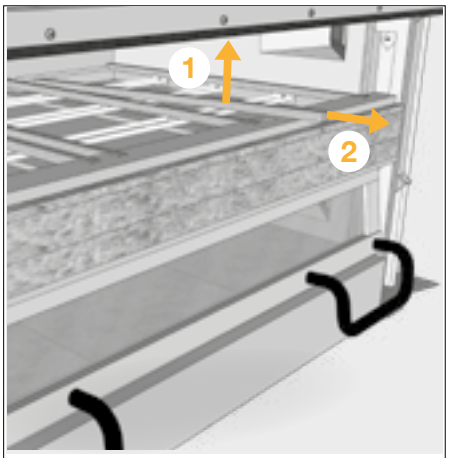

37. Remove the stone support bars. First lift the front of the bar upward (**1**), then pull it out (**2**). There are two bars for each stone.

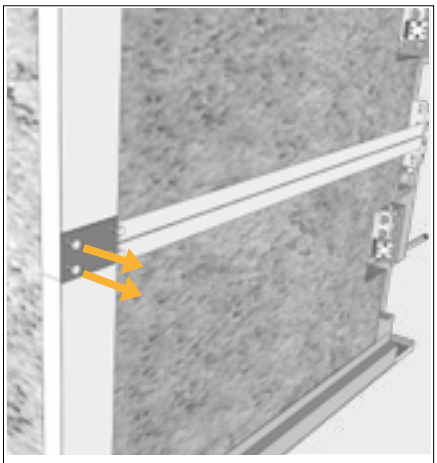

38. Remove the screws from the left-hand rear fixing point (two screws per deck).

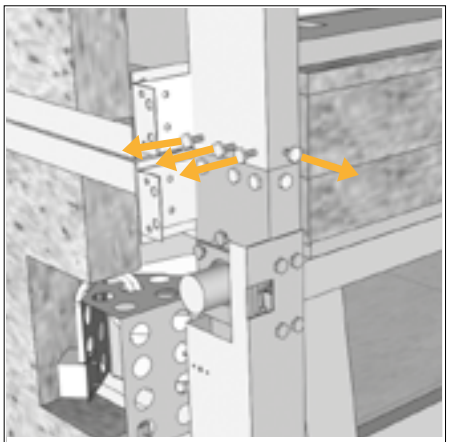

39. Remove the top screws from the left-hand front fixing point (four screws per deck).

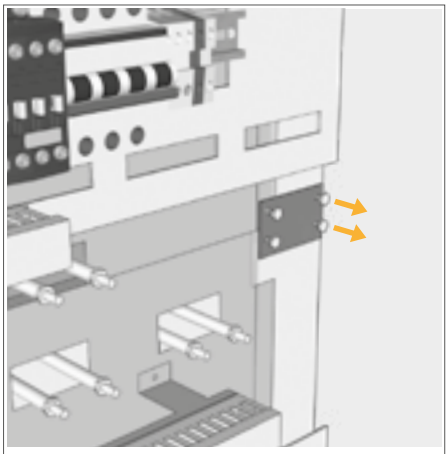

40. Remove the screws from the right-hand rear fixing point (two screws per deck).

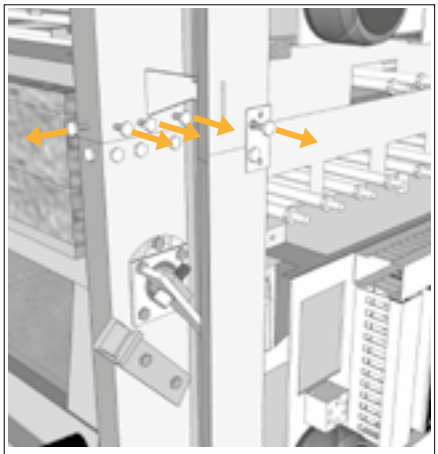

41. Remove the seven screws from the right-hand front fixing point (per deck). The last two screws are removed in the next step.

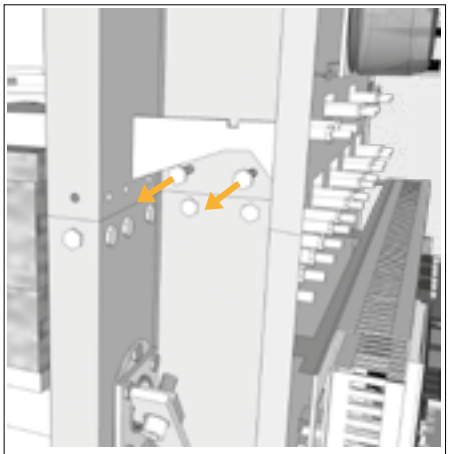

42. Remove the final two top screws from the right-hand front fixing point.

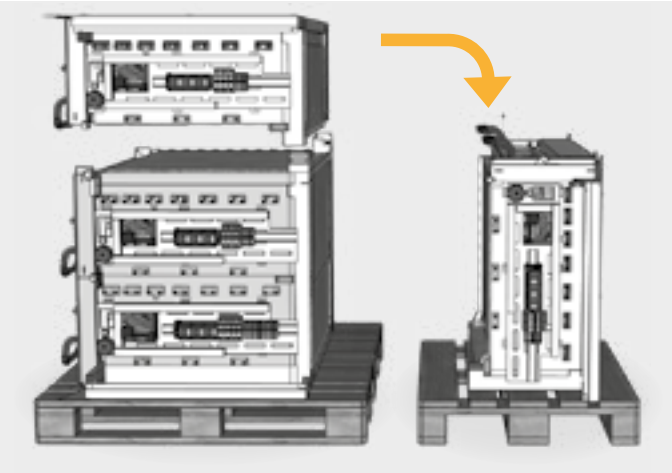

43. Divide the oven decks by lifting one deck straight up, then place the deck on its back for easier access through narrow spaces. **DO NOT** use the oven-door handles or the oven-vent knobs to lift the oven.

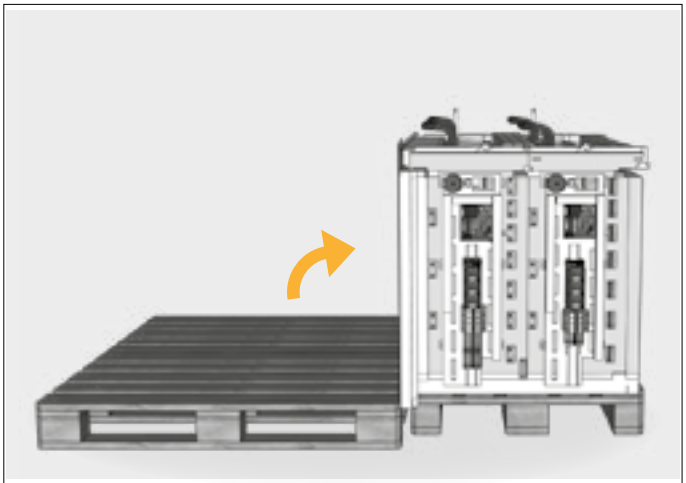

44. The bottom two decks fit through most doors when turned onto their back. **The fixing points between Deck 1 and Deck 2 must remain secured if turning them together.**

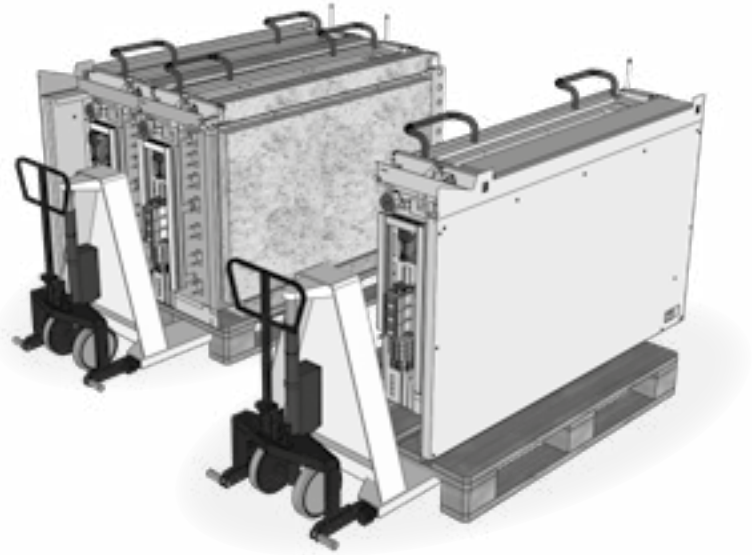

Information!

Disassembly complete. After passing through narrow spaces, reassemble the oven decks and reconnect all components as shown in this chapter.

Then continue with one of the following:

- 1-2 deck oven (**page 11**)
- 3-4 deck oven (**page 12**)
- 5 deck oven (**page 13**)
- Leg installation and standard features (**page 14**)
- Casters for 5-deck oven (**page 20**)
- Oven with spacers (**page 22**)

3.4 Electrical Connection

Power supply requirements vary depending on the oven model and voltage.For correct power supply connections and required supply protection ratings, refer to the oven rating plate, electrical diagram, and technical specification.

All electrical installations must comply with local electrical codes and regulations.



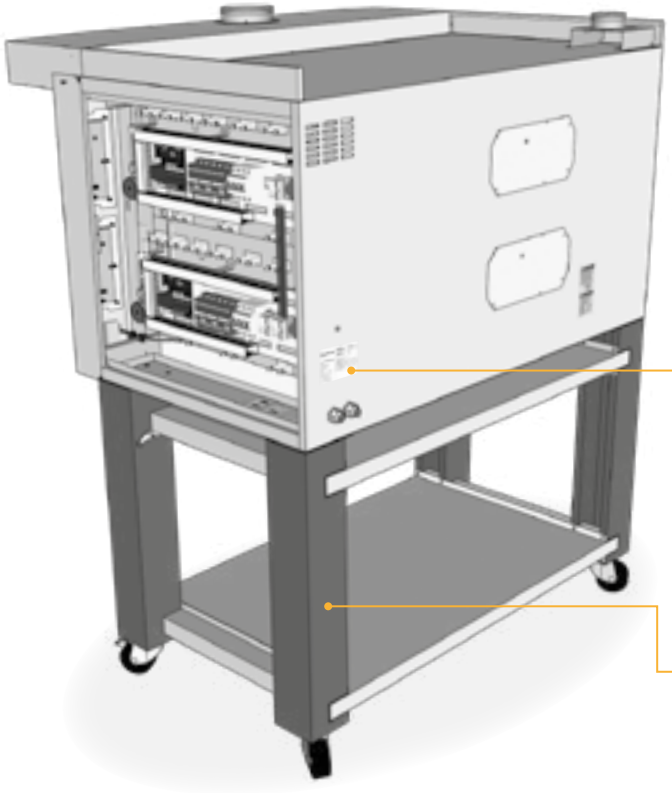

Oven must be installed with:

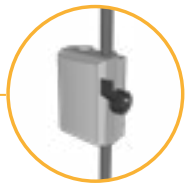

✔ **An external main switch with minimum 3 mm contact gap**



✔ **Flexible conduit for each power supply cable**

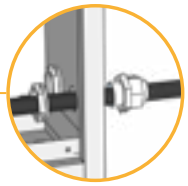

✔ **Cable gland with locknut for each power supply cable**



✔ **Correct number of power supply cables**

✔ **Correct cable size**
(Refer to label inside the electrical cabinet)



✔ **Correct breaker size with Type C characteristics**



↑
Download Technical Specification



✔ **Correct voltage and phases**
(See rating label for your specific oven)



✔ **Adequate restraining relief**
(To limit the movement of the appliance without transmitting stress to the electrical conduit)

Important!

For safety reasons and to maintain the validity of the warranty, all electrical work must be carried out by a qualified electrician.

For supply connection use only copper wires suitible for at least 75°C (167°F)".

The earth potential equalizer screws must be installed. These are located on the backside of the oven next to the connecting cable.

Important for USA and Canada!

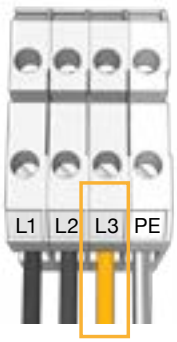

If installing Delta High-Leg voltage, the high leg must be connected to terminal L3. This conductor may also be referred to as the "wild leg," "stinger leg," or "wild phase." The high-leg phase is typically marked with orange insulation or another clearly identifiable method.

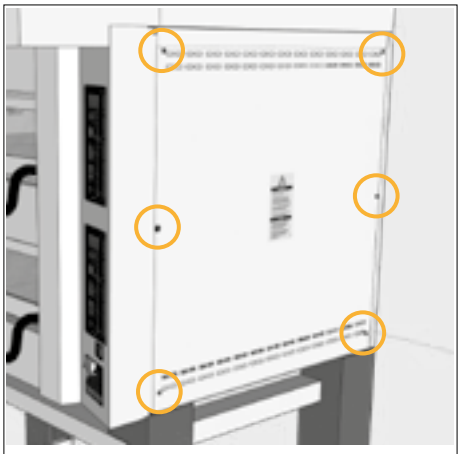

Remove the screws (5+1 pcs) that secures the righthand side panel and take off the panel.



Verify that the electrical supply corresponds with the specifications on the oven rating plate (voltage, phases, and kW).

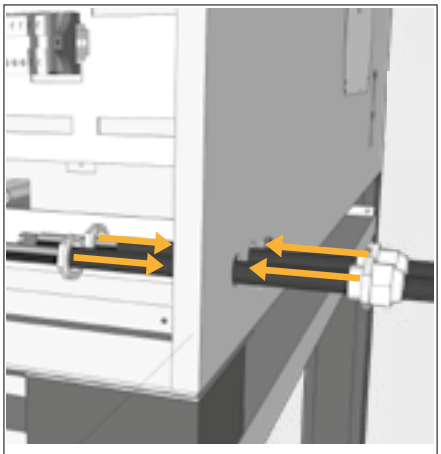

Install the correct number of power supply cables, along with cable glands and locknuts. The appliance must be installed using flexible conduit.

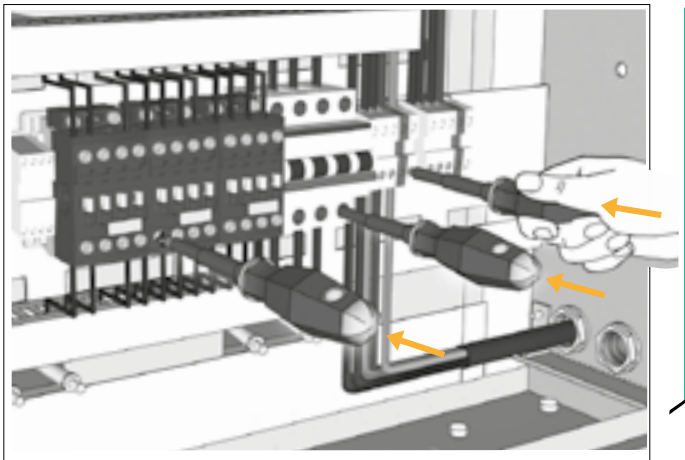

Tighten and check all terminal, breaker, and contactor connections on all decks after transportation and before starting the oven. **Do not** overtighten, as this may damage the connections.

Information!

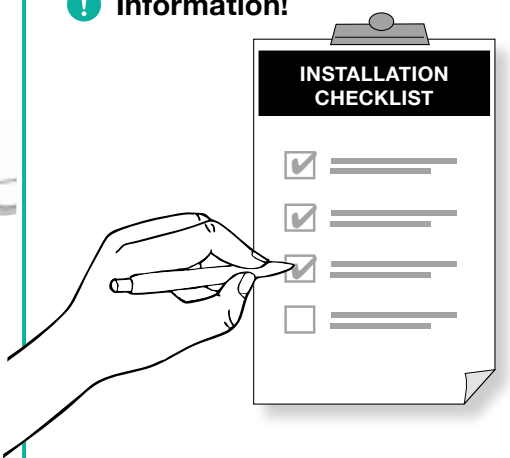

Turn on the power and complete the installation checklist (provided) before reinstalling the side panel.

3.5 Ventilation

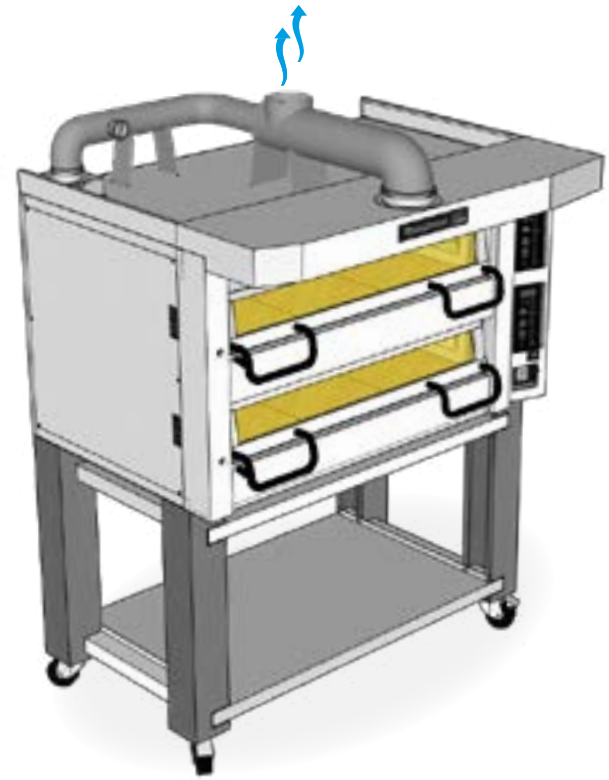

Information!

EPA 202 Tested
PizzaMaster electric deck ovens conform to ventilation recommendations set by ANSI/NFPA96 using EPA 202 test method.

Grease-laden vapor test, EPA 202 (ventless requirements): 8hr pepperoni pizza, <5,00 mg/m3.

Exhaust airflow, exhaust temperatures and heat emissions are specified in **Technical Specification.**

Download Technical Specification →

Important!

- Ventilation design and installation must comply with local codes and regulations and should be verified by qualified specialists.
- Incorrect installation can reduce oven performance, ventilation efficiency and user comfort.
- The provided flue diverter must always be installed and must not be blocked.
- Local airflow conditions (draft, pressure balance, temperature, make-up air) may influence oven performance and should be considered when planning and installing the oven.

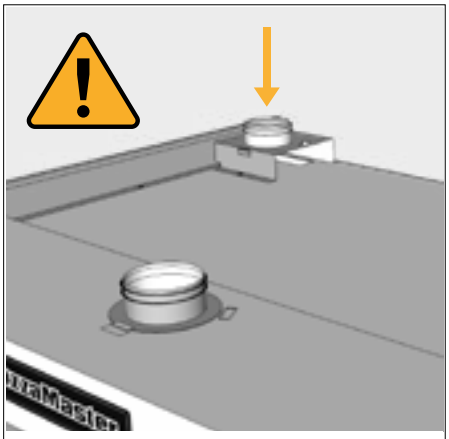

Flue Diverter

Ensure the flue diverter is firmly connected to the oven. For assembly instructions, see Assembly starting on **page 10**.

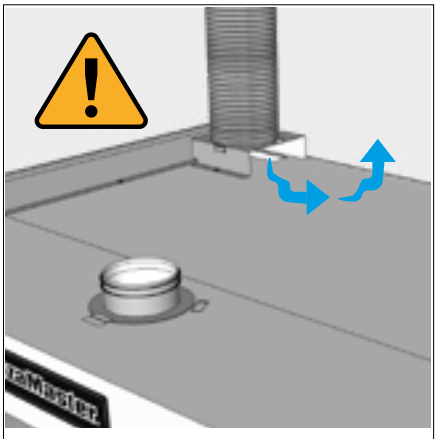

Flue Diverter Air Circulation

Regardless of the connection method, the flue diverter base must remain open at all times.



Warning!

DO NOT place any objects that block ventilation. Objects placed on top of the oven can affect baking performance, obstruct exhaust flow, reduce oven efficiency, **and may create a fire hazard**.

3.6 Ventilation Options

The oven is designed with connection options for an extraction system. The required extraction capacity depends on the oven model; refer to the Technical Specification for the requirements of your specific oven.

Depending on the options selected, there are different ways to connect the ventilation. PizzaMaster recommends the Factory Direct Vent System (option); however, the oven can also be installed under an extractor hood or as a free-standing unit connected to direct ventilation.

3.6.1 Eyebrow Hood



Built depth 135 mm (5.3 in)
Outlet size 160 mm (6,3 in)

Designed to integrate seamlessly with an extraction system when needed.

3.6.2 Extended Hood (option)

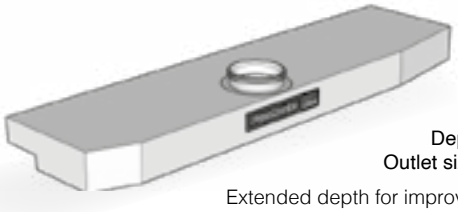

Depth 305 mm (12 in)
Outlet size 160 mm (6,3 in)

Extended depth for improved capture range. Recommended for Bakery, required for FDVS.

3.6.3 Factory Direct Ventilation System (option)

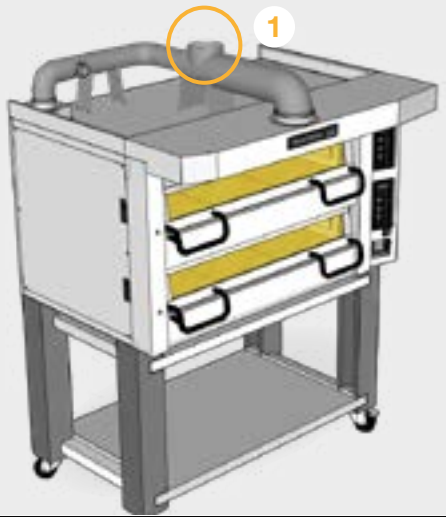

PizzaMaster has developed the Factory Direct Ventilation System (optional) to ensure stable baking temperatures and improved comfort in front of the oven.

The FDVS is easy to install, using a single connection point for two functions. The airflow automatically regulates the extractor capacity between the oven exhaust (typically lower airflow demand) and the eyebrow hood outlet (typically higher airflow demand).

The Factory Direct Ventilation System uses one connection point (**1**) with an outlet size of 200 mm (7.9 in).

Important!

Must be combined with Extended Hood (option).

3.6.4 Free-Standing

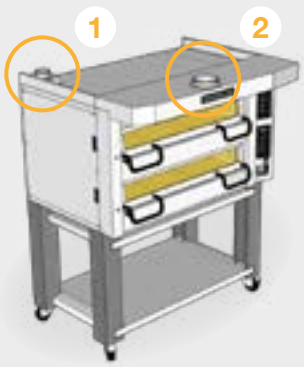

Modular ovens are prepared with two ventilation connection points:
Rear (**1**) with an outlet size of 100 mm (3.9 in) and
Front (**2**) with an outlet size of 160 mm (6.3 in),
both of which can be connected to a ventilation system. Refer to the Technical Specification for outlet orientation, height, and diameter.

3.6.5 Extractor hood



When installed under an external extraction/capture hood, no duct connection is required to the oven's exhaust outlets.
The hood must extend at least 150 mm (6 in) beyond the outer edge of the oven to effectively capture air and steam.

3.7 Steam System (options)

Important!

- The water supply must be flushed before connecting to the oven. After flushing, fill a full-size bucket with water and verify that the water is clean before making the connection. See **page 35, Step 1.**
- Incoming water pressure must not exceed 0.6 MPa (87 psi).
- Carefully read the instructions on the label attached to the steam system before installing the water supply.

Information:

Requirements:

- Water drain: Not required
- Backflow protection: Required, not included
- Auto shut-off valve: Included
- Water softener: Recommended
- Incoming water pressure: 0.2–0.6 MPa (29–87 psi)
- Connection: G ¾" (NH ¾" for USA & Canada)
- General water quality: Cold drinking water

Water quality limits and detailed specifications are provided in the **Technical Specification.**

Download Technical Specification →



Your oven can be equipped with an optional steam system in one or several decks.

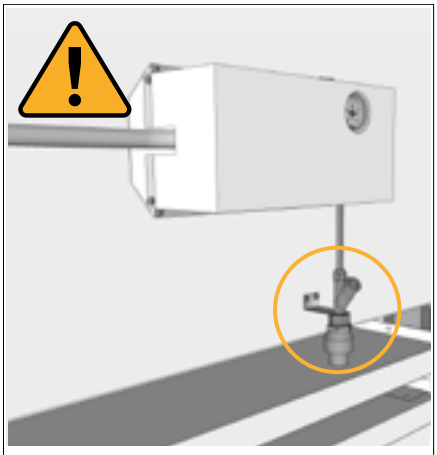

This appliance must be installed with a proper backflow protection system by authorized personnel.

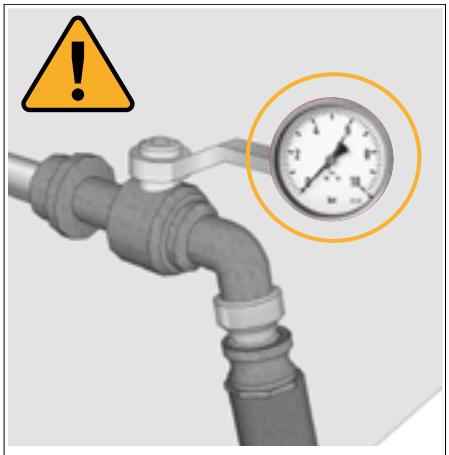

Incoming water pressure must not exceed 0,4 MPa (58 psi).

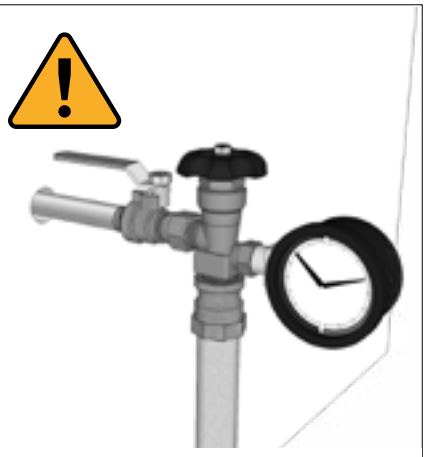

If the incoming water pressure exceeds 0,4 MPa (58 psi), a water pressure reducing valve must be installed.



Read the instructions on the label located next to the steam system carefully. The label indicates the water pressure to which the system must be adjusted.

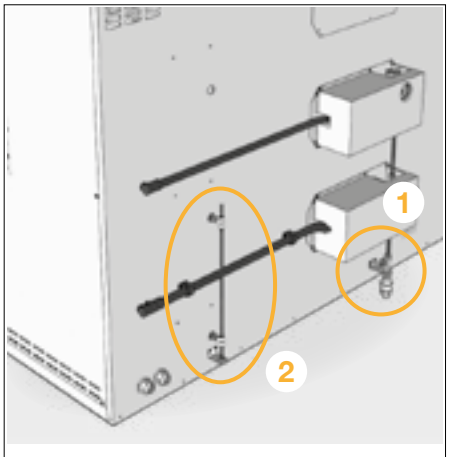

The steam system is equipped with two safety features: (**1**) a water blocker at the inlet that shuts off in case of leakage, and (**2**) a drain system that prevents flooding if the water blocker fails.*

** the drain system does not need to be connected*



1. Open the water supply and let the water run. This will flush the hose and remove any residue in the water system. Fill a full-size bucket and verify that the water is clean before connecting the water supply to the steam system.

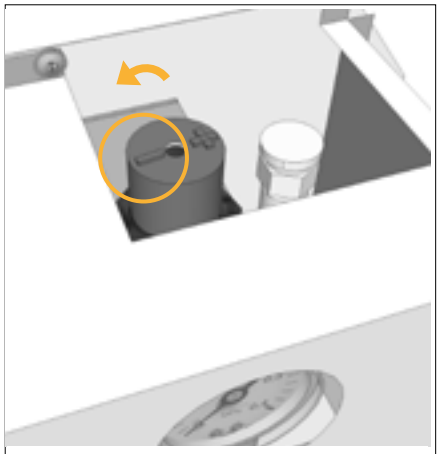

2. Make sure the blue knobs are set to the minimum position by turning them in the negative (–) direction.

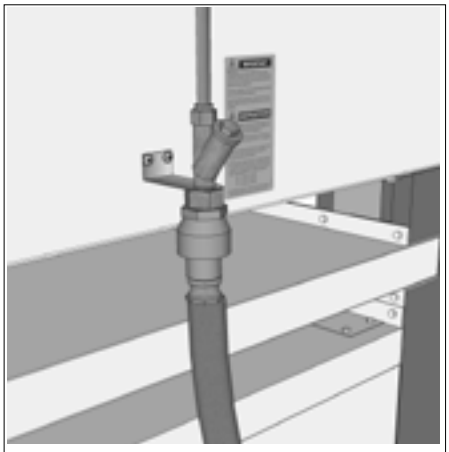

3. Connect the hose to the oven.

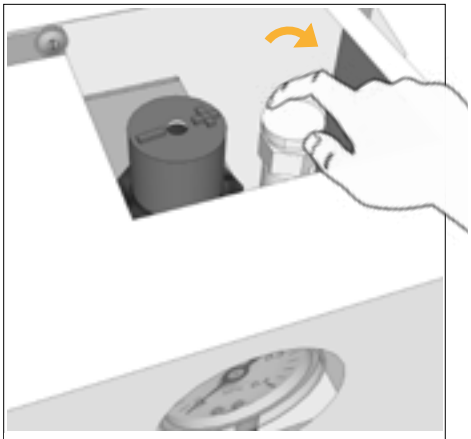

4. Open the Air Relief Valve.

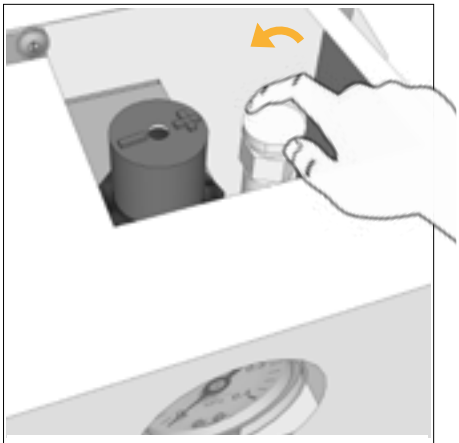

5. Turn **ON** the water and let water flow through the valve and then close the Air Relief Valve.

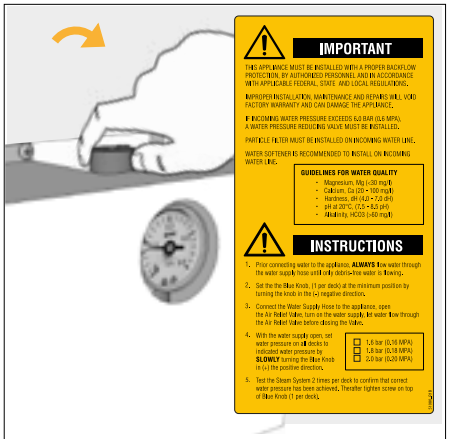

6. Set the water pressure to the value marked on the label by **slowly** turning the blue knob regulator in the positive (+) direction.*



7. Turn **ON** the oven and set the temperature to 220°C (428°F). The steam button will light up to indicate that the system is ready (15 minutes after the oven has reached 200°C (392°F).*

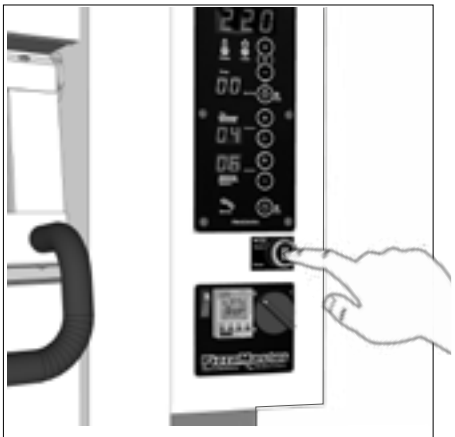

8. The steam system requires a minimum reload time of 12 minutes. Test the steam system at least twice per deck to ensure the correct water pressure has been achieved.

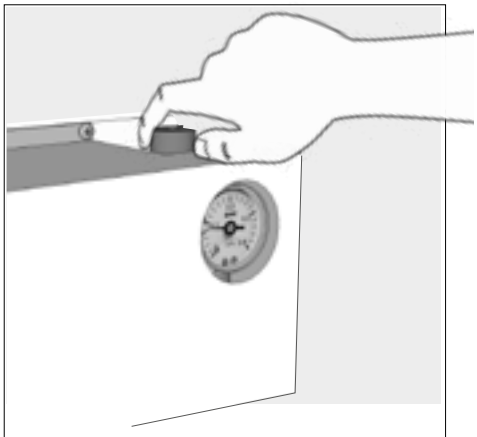

9. Adjust the water pressure if necessary. Repeat steps 4-9 for all decks equipped with optional Steam System

***** *Press the Steam Button to produce steam inside the deck.*

4.1 Display ED

Quick Start Guide, video



Baking Temperature
Actual temperature displayed during:
- Startup process
- Aid System operation

Power Light

TurboStart Light

Baking Timer Indicator

Service Light

7-Day Automatic On/Off Timer *(option)*

Model Number
Serial Number
Power Supply

Set Baking Temperature

Display Real-Time Temperature and Top Front Heat Intensity

Baking Timer Button

Baking Timer (Auto Mode when lit)

Set Top Heat Intensity
From 0 to 10 (0 = Off)

Adjust Bottom Heat Intensity
From 0 to 10

Deck ON/OFF

Auto Light for optional 7-Day Automatic On/Off Timer, activated when lit

Steam System *(option)* – Ready to Use When Lit

Main Switch
(Turn Oven ON/OFF)

0 = OFF
1 = ON

- **Power:** A yellow indicator light shows when the heating element is on.
- **TurboStart:** A yellow indicator light shows when TurboStart is active. TurboStart activates automatically at start-up and when the set temperature is significantly increased to rapidly heat the oven. The function switches off slightly before the selected baking temperature is reached. For further details, see Oven Functions (**page 49**)
- **Service:** If the oven overheats, it switches off automatically. A red indicator light shows when the overheat protection system has been activated. To reset the oven, turn off the main switch and open the electrical panel on the right side of the oven. Once the temperature has dropped below 390°C / 734°F (standard model) or 490°C / 914°F (optional Xtreme Perfomence), reset the circuit breakers and turn the oven back on.

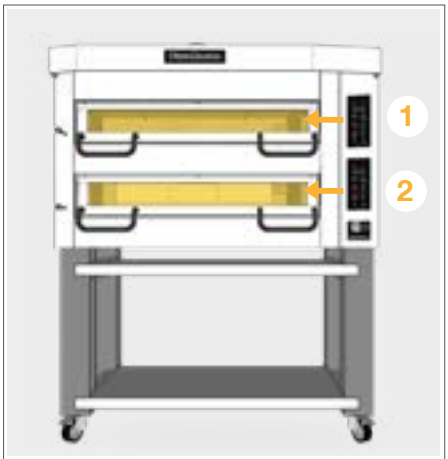

Each deck has an independent control panel: Deck 1 (**1**) and Deck 2 (**2**).

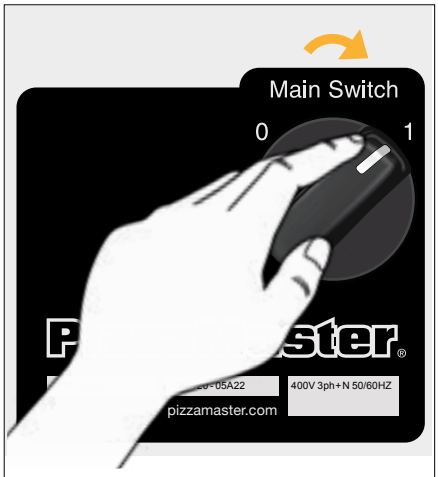

1. **Turn ON the oven.**
Set Main Switch to position **"1"** to turn **ON** the oven.

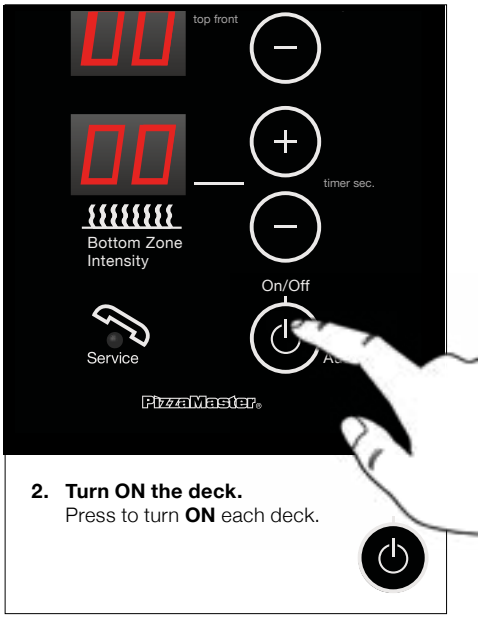

2. **Turn ON the deck.**
Press to turn **ON** each deck.

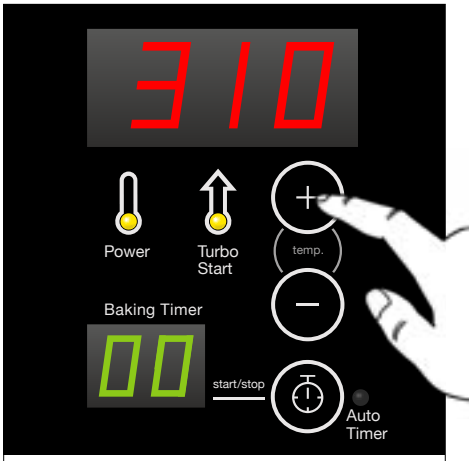

3. **Set temperature.**
Press to adjust the desired temperature.

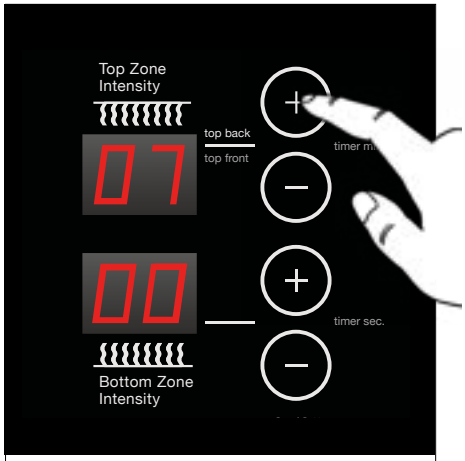

4. **Set top heat zone.**
Press to adjust the **TOP** heat intensity:
0 = Off
10 = Maximum.

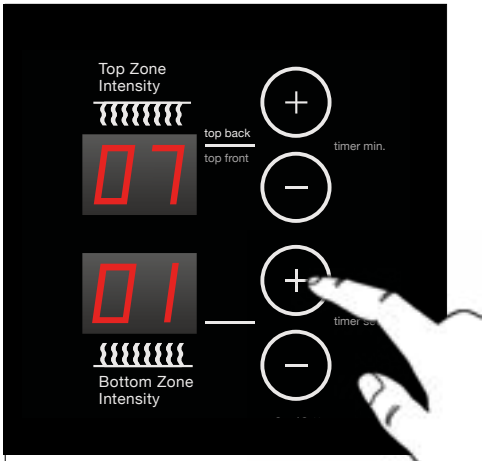

5. **Set bottom heat zone.**
Press to adjust the **BOTTOM** heat intensity:
0 = Off
10 = Maximum.

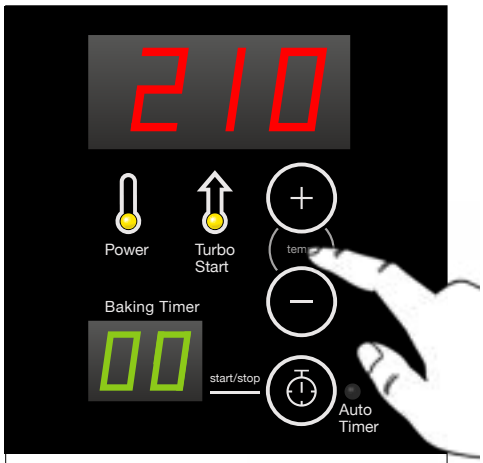

6. **View real-time temperature.**
Press and hold the **Temp** button to display the deck's actual temperature at any time.



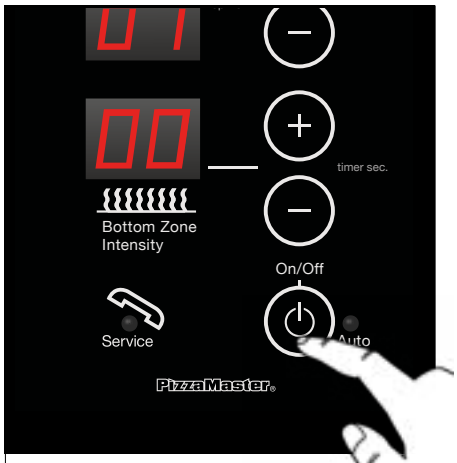

7. **Turn OFF the deck (per deck).**
Press to turn **OFF** the deck.



8. **Turn OFF the oven (Main Switch "0").**
Set the Main Switch to position **"0"** to turn **OFF** the oven.

4.1.1 Baking Timer

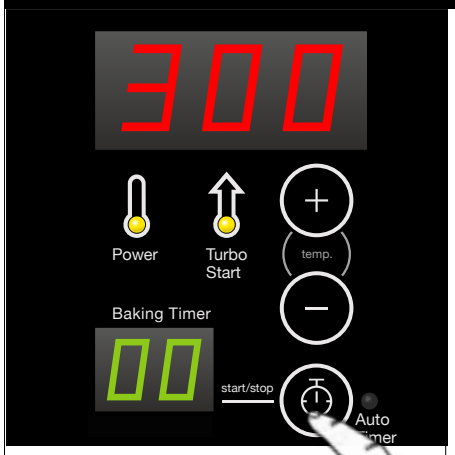

1. Press **START/STOP** timer key.

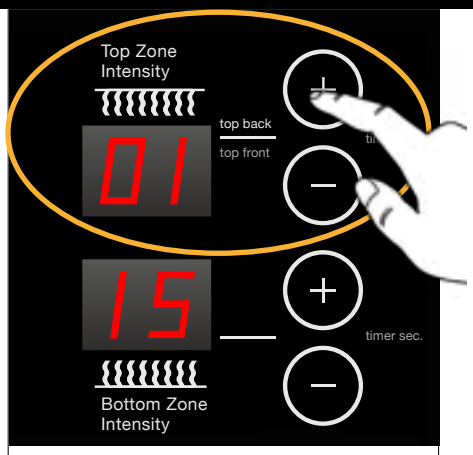

2. Set minutes with **+** and **–** on TOP setting keys. In this example we show **1 minute**.

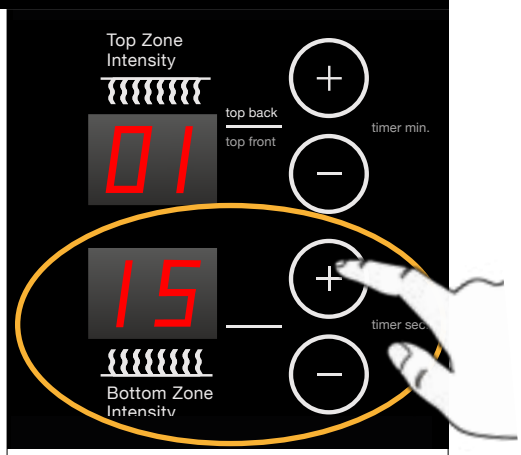

3. Set seconds with **+** and **–** on BOTTOM setting keys. In this example we show **15 seconds.**

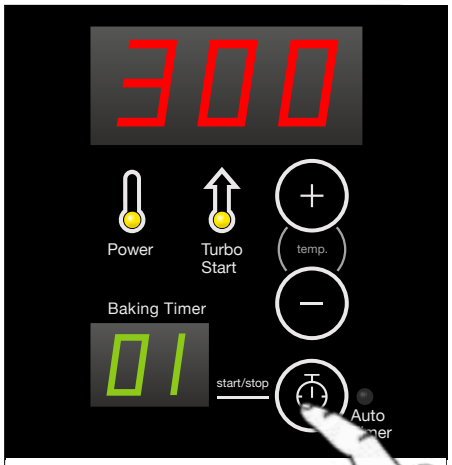

4. Confirm and start timer by pressing **START/STOP** timer key again. Minutes and Seconds will disappear when Starting. Heat Zone intensity settings will appear again.

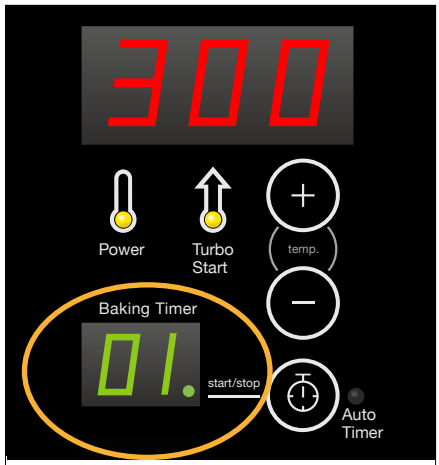

5. When time is above **1 full minute** a flashing dot will indicate the **countdown has started**. When time is below 1 full minute, timer will **show seconds counting down.**

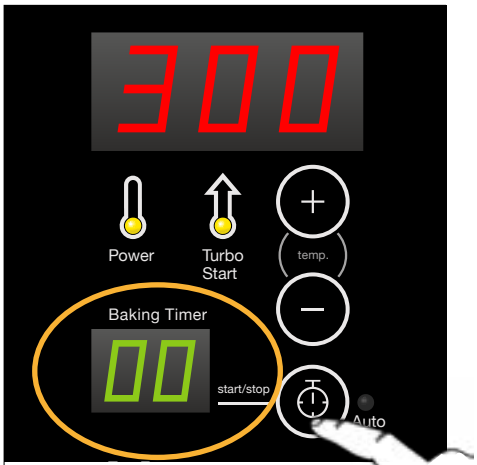

6. The timer will count down to **zero** and activate the buzzer. Reset by pressing **START/ STOP** timer key.

4.1.2 Baking Auto Timer

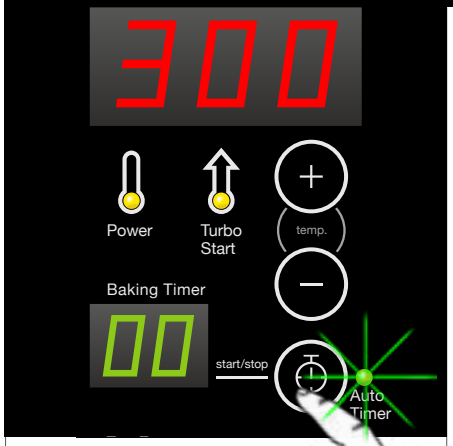

1. Press and hold **START/STOP** timer key. A **green led** (auto timer) will light up.

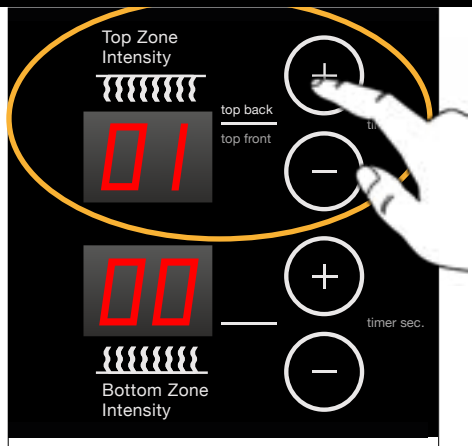

2. Set minutes with **+** and **–** on TOP setting keys In this example we show **1 minute.**

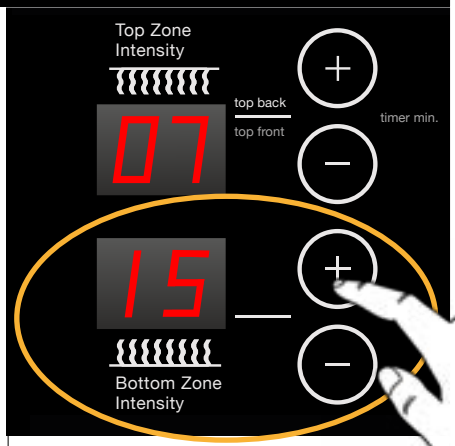

3. Set seconds with **+** and **–** on BOTTOM setting keys In this example we show **15 seconds.**

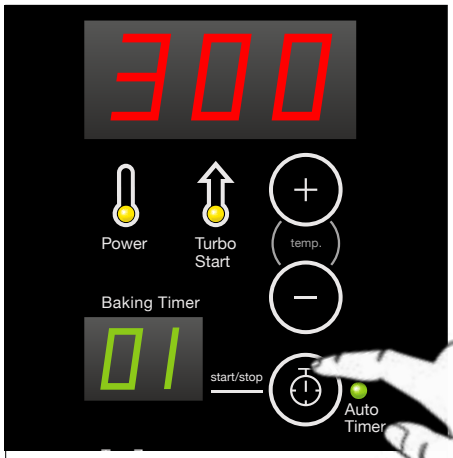

4. Confirm and start timer by pressing **START/STOP** timer key again. Minutes and seconds will **disappear** when starting. Heat Zone intensity settings will **appear** again.

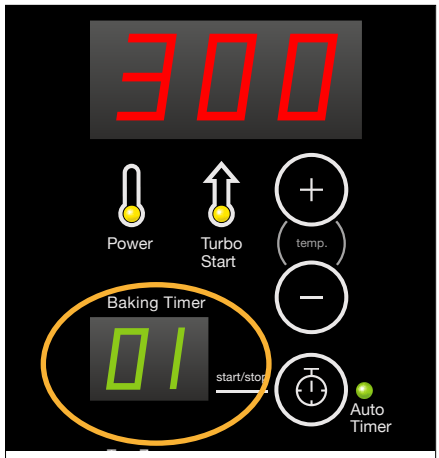

5. When time is above **1 full minute** a flashing dot will indicate that countdown has **started**. When time is below 1 full minute timer will show **seconds** counting down.

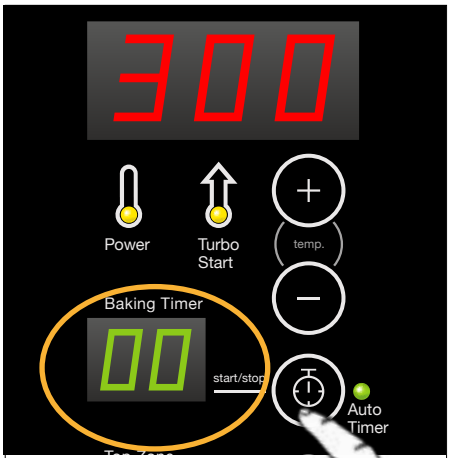

6. The timer will count down to **zero** and activate the buzzer for **5 seconds**.

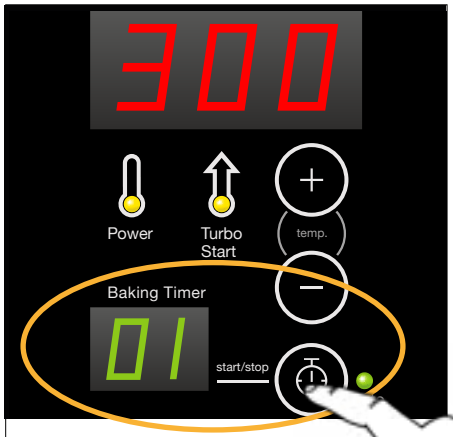

7. The timer remembers its **pre-set time**, Simply press the **START/STOP** timer key to start a new countdown.

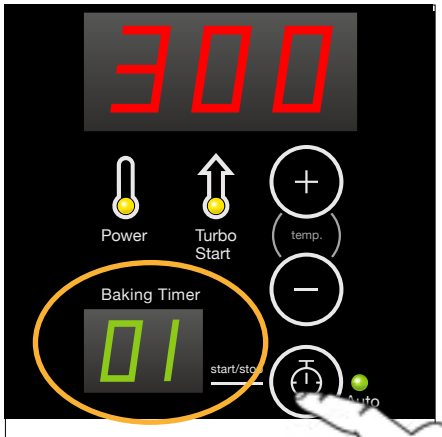

8. Auto Timer can repeat up to **8 cycles of the same pre-set time**. Press START/ STOP to add more. **The next countdown** will be visualized when the first is done.



9. To change pre-set time: Press and hold 2 sec.

   To exit timer setting: Press and hold 5 sec.

4.2 First time Start-Up

Ceramic Clay Stones with Crisping Function



Warning!

- Before the first bake, you must burn off any remaining protective oil. This process will produce some smoke, which is normal.
- All packaging material must be removed before heating the oven.

First time Start-Up, video →

Important!

For decks equipped with:
Ceramic Clay Stones with Crisping Function
(Standard feature), Follow **step 1-10**.

For decks equipped with:
Artisan High-Temperature Clay Stones
(Optional feature)
DO NOT continue with steps 5–10 on this page.
Complete **steps 1-4** only, then follow the alternative burn-off procedure on **page 42**.

Information

Different baking stones can be used in separate decks, allowing various product types to be baked simultaneously. The burn-off procedure varies by stone type.

Ceramic Clay Stones with Crisping Function
Textured ceramic clay hearthstones designed for efficient heat discharge and rapid recharge.

Designed for baking up to 370°C (698°F).
Optional Artisan High-Temperature Clay Stones available for baking above 370°C (698°F).



1. **Turn ON the ventilation to max**. If no ventilation is available, open any nearby doors and/or windows.



2. **Open Vent Control Lever on each deck.**
Pull out the ventilation handle.



3. **Turn ON the oven.**
Turn ON the oven from the Main Switch.

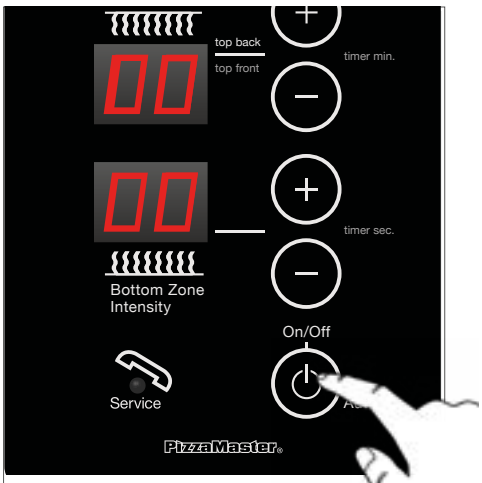

4. Turn ON each oven deck.
Press ON/OFF button on every deck to turn them ON.

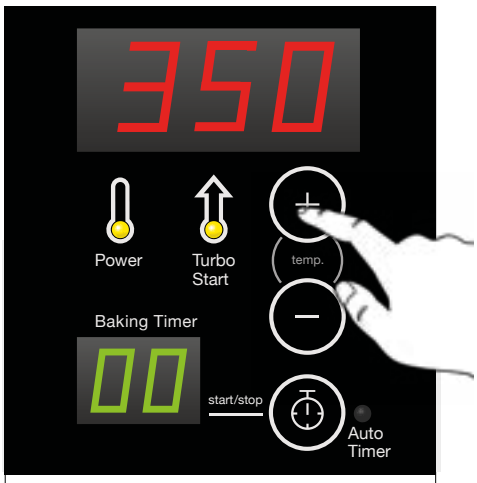

5. Set Temperature to 350°C (662°F).
Press the buttons to set the oven 350°C (662°F).

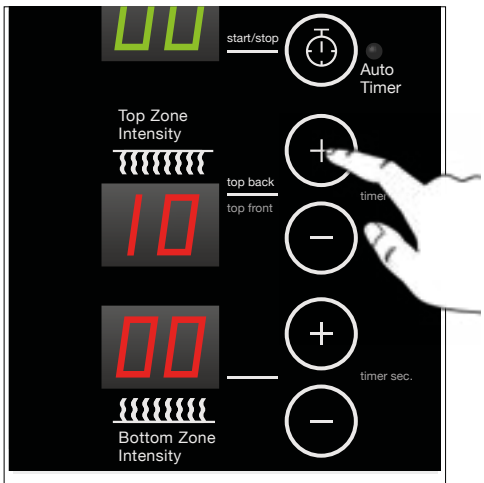

6. Set Top Heat Zone to 10.
Press to adjust the **TOP** heat intensity:
0 = Off / 10 = Maximum

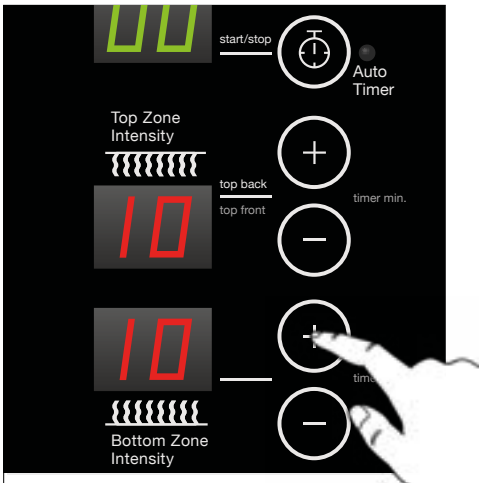

7. Set Bottom Heat Zone to 10.
Press to adjust the **BOTTOM** heat intensity:
0 = Off / 10 = Maximum.



8. Real-time temperature.
Press and hold the **TEMP** button at any time to display the deck's actual temperature.



9. Wait 60 minutes.
When the oven reaches 350°C (662°F), wait a minimum of 60 minutes or until all smoke has dissipated.



10. Allow all smoke to vent from the oven.

CONGRATULATIONS!

Your new oven is ready to use!



Refer to Baking Guidelines (**page 50**) for recommended oven settings.

4.3 First time Start-Up

Artisan High-Temperature Clay Stones



Warning!

- Before the first bake, you must burn off any remaining protective oil. This process will produce some smoke, which is normal.
- All packaging material must be removed before heating the oven.

First time Start-Up, video →

Important!

Alternative burn-off procedure

This procedure applies only to decks equipped with the optional Artisan High-Temperature Clay Stones.

Complete Step 1–4 on page 40 – Then continue with step 1 on this page.

Information

Artisan High-Temperature Clay Stones
(Option)
Made from thick, artisan Italian clay. Ideal for Neapolitan and other high-temp baking with reduced bottom burn and authentic crust.

Designed for baking above 370°C (698°F).

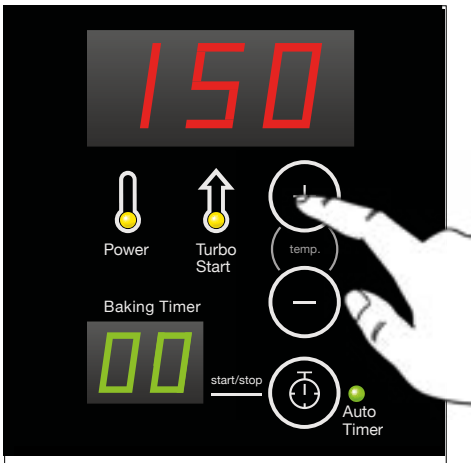

1. **Set Temperature to 150°C (302°F).**
Press to set the oven temperature to 150°C (302°F)

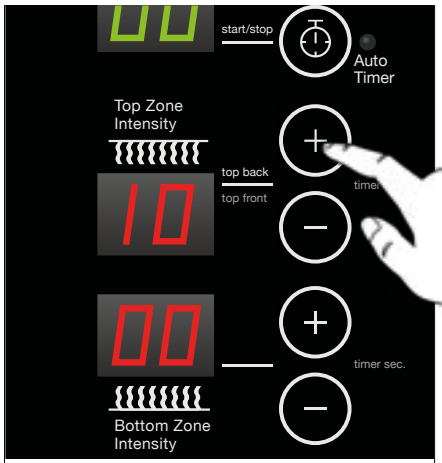

2. **Set Top Heat Zone to 10.**
Press to adjust the **TOP** Heat intensity:
0 = Off
10 = Maximum.

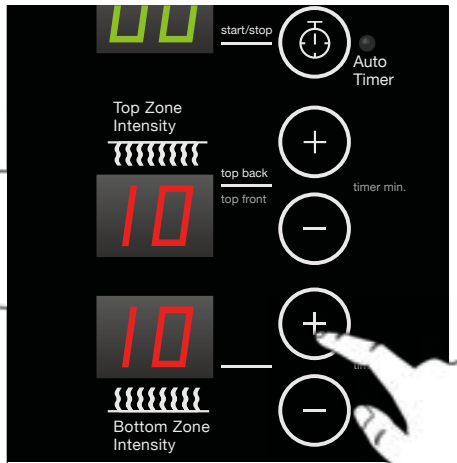

3. **Set Bottom Heat Zone to 10.**
Press to adjust the **BOTTOM** Heat intensity:
0 = Off
10 = Maximum

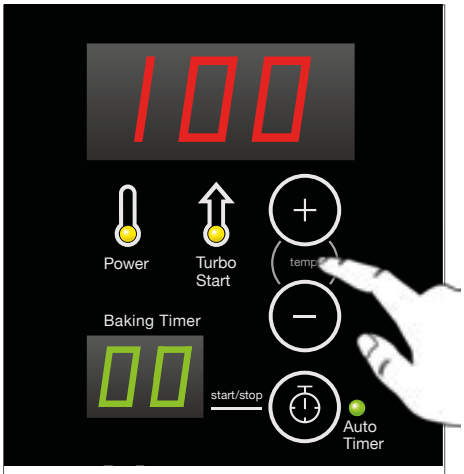

4. Real-time temperature.
Press and hold the **TEMP** button at any time to display the deck's current temperature.





5. Wait 90 Minutes
When the oven reaches 150°C (302°F) you must wait at least 90 minutes.



6. Set Temperature to 250°C (482°F).
Press the buttons to set the oven 250°C (482°F).





7. Wait 60 Minutes
When the oven reaches 250°C (480°F) you must wait at least 60 minutes.

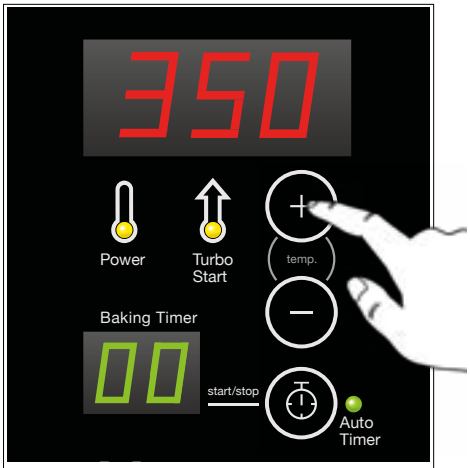

8. Set temperature to 350°C (662°F).
Press the buttons to set the oven 350°C (662°F).





9. Wait 30 Minutes
When the oven reaches 350°C (662°F) you must wait at least 30 minutes.



10. Allow all residual smoke to vent from the oven.

CONGRATULATIONS!

Your new oven is ready to use!



Refer to Baking Guidelines (**page 50**) for recommended oven settings.

4.4 Steam System (option)

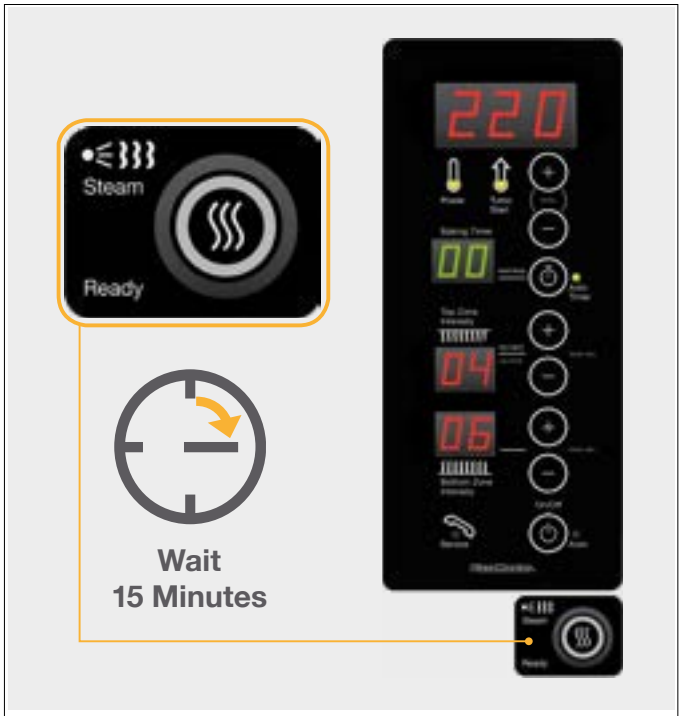

1. At startup, the oven must reach at least 200°C (392°F) and remain above that temperature for 15 minutes to be ready for use.

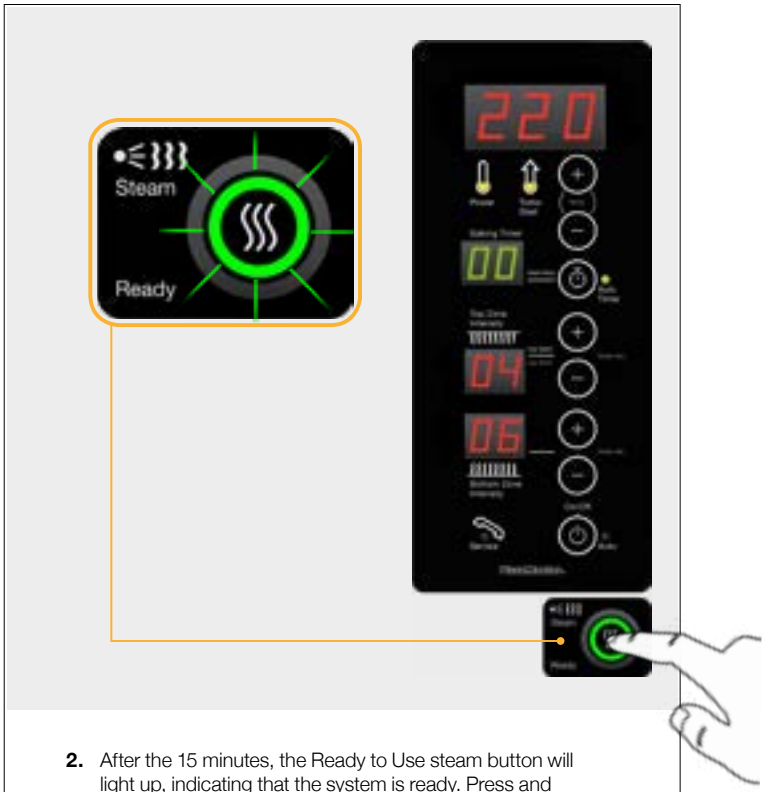

2. After the 15 minutes, the Ready to Use steam button will light up, indicating that the system is ready. Press and release the button at any time.



3. After use, the button light will turn off for approximately 12 minutes during the reload cycle. Steam is not available during this time.

4.5 7-Day Automatic Start/Stop Timer (option)



1. To activate the timer on a digital panel, set the main switch to position 1.

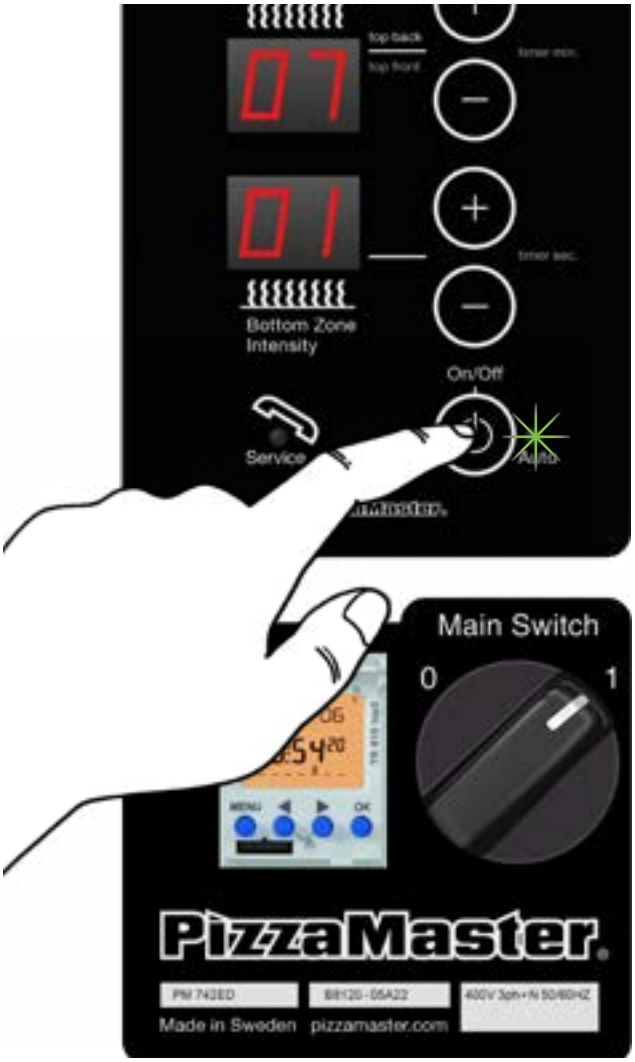

2. Press and hold the Deck ON/OFF button until the green lamp turns on.

Important!.

The Main Switch must be set to position “1” for the timer to operate. In position “0”, the timer program remains stored but will not run.

Information

The Timer is not configured from factory. You need to follow ”Timer Set Up” and ”Program Set Up” steps before first use.

Tip/Example

1. Before starting to program, write down your Start and Stop Times.
2. **START:** Set the start 45 minutes before opening.
3. **STOP:** Set the stop 15 minutes after closing.
4. **Example:** See below.

Weekday:	Monday	Tuesday	Wednesday	Thursday	Friday	Saturday	Sunday
Open Hours	11.00–21.00	11.00–21.00	11.00–21.00	11.00–21.00	11.00–22.00	12.00–22.00	12.00–20.00
Suggested Start/Stop Times	10.15–21.15	10.15–21.15	10.15–21.15	10.15–21.15	10.15–22.15	11.15–22.15	11.15–20.15

4.5.1 Timer Setup (clock + language + date)

Oven Status:
ON = Oven Operating
OFF = Oven Inoperating

Date Display



Current Weekday:
1 = Monday
2 = Tuesday
3 = Wednesday
4 = Thursday
5 = Friday
6 = Saturday
7 = Sunday

Current Time



1. Select language by pressing ◀ or ▶ and confirm with OK.



2. Press OK to configure Form Date.



3. Select Date format by pressing ◀ or ▶ and confirm with OK.



4. Select Year by pressing ◀ or ▶ and confirm with OK.



5. Select Month by pressing ◀ or ▶ and confirm with OK.



6. Select Day by pressing ◀ or ▶ and confirm with OK.



7. Press OK to configure Form Time.



8. Select Time display format by pressing ◀ or ▶ and confirm with OK.



9. Configure Hour by pressing ◀ or ▶ and confirm with OK.



10. Configure Minute by pressing ◀ or ▶ and confirm with OK.



11. Configure Summer or Winter time by pressing ◀ or ▶ and confirm with OK.



Now your timer is configurated!

4.5.2 Program Setup (Start/Stop schedule)



1. Press MENU to program ON-OFF time and confirm with OK.



2. Press OK to configure new program.



3. Press ◀ or ▶ to program ON or OFF times and confirm with OK.



4. Select ON Hour by pressing ◀ or ▶ and confirm with OK.



5. Select ON minutes by pressing ◀ or ▶ and confirm with OK.



6. Select day by pressing ◀ or ▶ and confirm with OK.



7. Press OK to copy ON time to another day(s), or press ◀ or ▶ to Save. Repeat steps 2 to 7 for individual day times.



8. Select days with ◀ or ▶ and confirm with OK.



9. Press OK to confirm.



10. Press OK to configure new program.



11. Press ◀ or ▶ and confirm with OK.



12. Select OFF Hour by pressing ◀ or ▶ and confirm with OK.



13. Select OFF minutes by pressing ◀ or ▶ and confirm with OK.



14. Select day by pressing ◀ or ▶ and confirm with OK.



15. Press OK to copy OFF time to another day(s), or press ◀ or ▶ to Save. Repeat steps 10 to 15 for individual day times.



16. Select days with ◀ or ▶ and confirm with OK. Save after pressing OK.

4.5.3 Delete Program(s)



1. Press MENU to start.



2. Press ◀ or ▶ until you find Delete and confirm with OK.



3. Press ◀ or ▶ to select "Single". Press OK to confirm. For "Delete All" skip to **step 5**.



4. Press ◀ or ▶ to select Single program. Press OK to delete it.



5. Select Delete All by pressing ◀ or ▶ and confirm with OK.



6. Press OK to delete all the programs.



7. Deleted confirmation is shown.



8. Press MENU once to go to Program menu, or twice to Exit.

*Note: *Use "Delete Program(s)" to remove one or all ON/OFF programs. After deletion, reconfigure using "Program Set Up".*

4.5.3 Factory Reset (Delete All)



1. *Press OK Menu, press ◀ or ▶ until you find Options menu and confirm with OK.



2. Press ◀ or ▶ until you find Factory Settings and confirm with OK.



3. Press OK to completly reset the timer.



4. Follow the steps under TIMER SET UP to configurate the timer.

*Note: *Factory Reset wipes date/time and program schedule. Follow "Timer Set Up" and "Program Set Up" to reconfigure the timer.*

4.6 Oven Functions

PizzaMaster Modular ovens combine manual and automatic functions to ensure stable temperature, consistent results, efficient operation, and fast recovery. The system continuously compensates for temperature deviations:

- **Recovery** increases heat when the oven is too cold
- **Guard** reduces heat when the oven is too hot

4.6.1 3 Heat Zones



PizzaMaster Modular ovens feature three heat zones:

- **Top Front**
- **Top**
- **Bottom**

The **Top** and **Bottom** heat zones are manually set by the user. The **Top Front** heat zone is automatically adjusted by the FrontIQ Recovery system to maintain balanced heat distribution based on the selected Top Heat setting (**see section 4.6.4**).

4.6.2 TempIQ Recovery™



TempIQ Recovery maintains stable baking conditions by compensating for temperature drops during operation.

FUNCTION BEHAVIOR

TempIQ Recovery operates in three progressive steps:

1. **Automatic Override**
   If the temperature drops below a defined threshold, the system temporarily overrides user settings.

   Heat intensity is automatically increased to accelerate recovery and maintain stable baking conditions.
2. **Warning Notification**
   If the temperature continues to drop, the display shows the actual oven temperature and starts blinking.
3. **Critical Alarm**
   If the temperature drops further to a critical level, a high-priority alarm is triggered, indicating that baking results may be affected.

System Recovery

When the temperature returns to normal levels:

- **The override function is deactivated**
- **The display returns to normal**

TempIQ Recovery deactivates if the set temperature is manually adjusted.

4.6.3 TempIQ Guard™



TempIQ Guard detects abnormal temperature increases, adjusts heat intensity and alerts the operator before a critical fault occurs.

FUNCTION BEHAVIOR

TempIQ Guard operates in two progressive steps:

1. **Automatic Override & Warning**
   If the temperature rises above a defined threshold, the system temporarily overrides user settings.
   - **Heat intensity (top heat) is automatically reduced to stabilize the temperature.**

   The display shows the actual oven temperature and a warning is issued.
2. **Critical Alarm**
   If the temperature continues to rise to a critical level, a high-priority alarm is triggered. The service indicator blinks, indicating that baking results may be affected.

System Recovery

When the temperature returns to normal levels:

- **The override function is deactivated**
- **The display returns to normal**

TempIQ Guard deactivates if the set temperature is manually adjusted.

4.6.4 FrontIQ Recovery™



FrontIQ Recovery compensates for heat loss at the front of the oven, typically caused by door openings.

The system automatically adjusts the Top Front heat zone in relation to the selected Top Heat setting, ensuring balanced heat distribution, faster recovery, and consistent baking results.

4.6.5 TurboStart



TurboStart accelerates oven preheating by temporarily setting all heat zones to maximum output.

The function activates automatically at cold start and when the baking temperature is significantly increased, ensuring the oven reaches the desired temperature as quickly as possible. To prevent temperature overshoot, TurboStart is deactivated approximately 30°C (54°F) before the baking temperature is reached.

During TurboStart operation, the display shows the actual oven temperature instead of the baking temperature.

4.6.6 Display messages



4.6.6.1 **OH** – Overheat Protection Activated (Reset Required)

The oven's resettable overheat protection has been triggered.

Action:

- **Switch off the oven completely**
- **Open the electrical panel**
- **Reset breaker F100**
- **Contact service to verify proper operation**

4.6.6.2 **CAL** – Calibration Mode Active

- **Action: Contact service**

4.6.7 Power Guard™ (option)



Power Guard is a fully automatic Power Management System that combines the power consumption for two decks and allows the installed power to switch between the decks and thereby limits the needed Amps for install by 50%.

- **Allows install even if electrical supply is limited**
- **Reduces the Amps needed for install**

Primary Deck

- **Operates at full 100% capacity**
- **Always choose the busiest deck as primary**

Secondary Deck

- **Capacity depends on primary deck workload.**
  With Power Guard installed, the capacity of the secondary deck depends on the workload of the primary deck. If primary deck is turned off or not busy, secondary deck will operate at 100% capacity, if workload of primary deck is high, the capacity of secondary deck can be limited.
- **Always choose the less busy deck as secondary**

5.1 Stone Selection

Different types of baking stones can be installed in separate decks. This allows the oven to be configured for baking various products simultaneously within the same unit.

Each deck can be optimized according to product type, baking temperature, and desired bottom heat characteristics.

The burn-off procedure must correspond to the installed stone type in each deck.
Refer to First Time Startup (**page 40**).

Ceramic Clay Stones with Crisping Function

- Textured ceramic clay hearthstones designed for efficient heat discharge and fast recovery.
- Suitable for most baking applications at temperatures up to 370°C (698°F).

Artisan High-Temperature Clay Stones (Option)

- Made from thick, artisan Italian clay. Designed for high-temperature baking with reduced bottom burn and authentic crust results.
  Recommended for baking temperatures above 370°C (698°F).

Important!

- Always bake pizza with the Vent Control Lever fully open.
- Never set the Top Heat lower than 3.
- Use the entire oven deck by rotating the placement of the pizzas (*never have a favorite spot in the oven*).
- Keep door closed between loads.

5.2 Recommended settings

Pizza baked directly on stone

Temperature	Refer to recipe (**page 51**)
Top	6–9
Bottom	0–3 (increase during busy hours)

Roast/Bake/Grill food

Temperature	180–220° C (355–430° F)
Top	5
Bottom	5

Pizza baked in pan or on screen

Temperature	Refer to recipe (**page 51**)
Top	3–5
Bottom	6–10

Bread

Temperature	Japanese/Asian bread 160–190° C (320–375° F) European bread 200–240° C (390–465° F)
Top	4
Bottom	6

If you require further baking guidance contact your local PizzaMaster representative or PizzaMaster directly.

5.3 Bake Preparation

Important!

Always monitor the water temperature to ensure the final dough temperature remains within the recommended range of 25–28°C (77–82°F) at the end of the mixing process to maintain proper fermentation control.

Dough preparation with a Two-Speed Spiral Mixer

1. Put the flour and yeast into the mixer bowl. Start the mixer and add 75% of the water.
2. Mix on the lowest speed (90–110 rpm) for 3 minutes.
3. Add the remaining 25% of the water.
4. After 5 minutes, gradually add the salt.
5. Switch the mixer to the second speed (180–220 rpm).
6. Mix on second speed for 6–10 minutes, depending on the water ratio in your dough.
7. Remove the dough from the mixer, place it on a floured surface, and divide it into balls (for a 33 cm pizza, use 250–300 g).
8. Place the dough balls in plastic boxes with airtight lids.
9. If the dough is wet and sticky, apply a small amount of olive oil to the dough and your hands to make handling easier.
10. Store the dough cold for 1–3 days, depending on the flour's protein percentage:
    - 24 hours for low protein
    - 48 hours for medium protein
    - 72 hours for high protein

Pizza dough recipe

Flour
(*bakers % = 100)

Always use a premium quality flour (Type 00, 0, 1 ,2) with a protein range between 10% (low) to 14% (high). Store flour in a cool, dry location to protect it from moisture, heat, and pests.

Water
(*bakers % = 55 to 75 reccommended 60/65)

Salt
(*bakers % = 3)

Yeast
Fresh (*bakers % = 0,4) or Dry always half of the Fresh (0,2%)

Baking temperature (classic Margherita pizza)

290°C (554°F) = 5 min	(change water to 50%, change salt to 1.5%, add sugar with 1.5%, add oil with 3.5%)
310°C (590°F) = 4 min 40 sec	(change water to 50%, change salt to 1.5%, add sugar with 1.5%, add oil with 3.5%)
330°C (626°F) = 4 min	(change water to 55%, change salt to 2%, add sugar with 1%, add oil with 3.5%)
350°C (662°F) = 3 min	(change water to 60%, change salt to 2.5%, add sugar with 0.5%, add oil with 3.5%)
370°C (698°F) = 2 min 50 sec	**(baking at this temperature or higher we recommend our high temperature model and our Artisan High-Temperature Clay Stone)**
400°C (752°F) = 2 min	
430°C (806°F) = 1 min 45 sec	(at this temperature or higher the pizza "positively dry out" as most of the fluids vaporize)
460°C (860°F) = 90 sec	(5 sec at this temperature or higher can make the difference between failure and success)
490°C (914°F) = 60 sec	

5.4 Making the Pizza

1. Take out the dough from the fridge at least 90 minutes before baking.
2. If you have a very light or wet dough it can be easier to use a wooden peel and/or spread the pizza directly on the peel.
3. For easier dough handling, use plastic tools when working with the dough.
4. Use as little flour as possible when "opening" the pizza dough and always shake off excess flour.

Recommendations for a classic Pizza Margherita

- For the tomato sauce, use only high-quality canned whole tomatoes and remove any hard parts.
- Use fresh buffalo or cow mozzarella and dry it as much as possible (tip: sprinkle with flaked sea salt 5–10 minutes before use).
- Add extra virgin olive oil to the pizza before placing it in the oven for added flavor.
- Do not use too much topping as this can negatively affect dough structure.
- Avoid wet toppings or ingredients with high water content, as they can make the pizza soggy. For example, mushrooms and bell peppers (or similar toppings) should always be roasted first to remove most of their moisture. Topping can with benefit be placed on the pizza after taking it out from the oven.
- When removing the pizza from the oven, place it on a grid or screen elevated at least 50 mm (2 in). This allows the pizza to ventilate as it continues to bake after removal and prevents condensation from forming underneath. If placed on a flat surface, moisture will accumulate and be absorbed into the crust, making it soggy. Let the pizza rest for 1–2 minutes.

6.1 Preventive Maintenance

Warning!

DO NOT	use any cleaning agents on the hearthstones.
DO NOT	use pressure washing equipment or a water hose to clean the oven.
DO NOT	use abrasive materials like steel wool or abrasive sponges to clean the oven door glass or the under built cabinet glass doors.
DO NOT	clean the oven door glass until it's cool enough to touch.
DO NOT	use any cleaning agents on the door glass.
DO NOT	use any oven cleaners or detergents to clean the aluminum coated steel interior.
DO NOT	clean the oven when it is hot (to avoid burning injuries).
DO NOT	clean ovens with Phantom Black exteriors using any abrasive cleaners, including the PizzaMaster cleaning cloth intended for stainless steel surfaces.

DO	always install oven with required minimum clearance for easy maintenance.
DO	create a cleaning program and regularly clean the oven.
DO	inspect and replace door gaskets as needed.
DO	lubricate door hinges if required (see **page 54**).
DO	ensure exhaust airflow and outlets are not blocked.
DO	routinely service the oven and only use original parts.
DO	follow PizzaMaster approved cleaning methods and products (see **pages 53–54**).
DO	contact your nearest PizzaMaster representative or PizzaMaster directly if maintenance or repairs are necessary.

6.1.1 Start-Up Kit

A proper cleaning routine extends oven life and enhances performance.

PizzaMaster encourages each owner to establish a cleaning routine to keep the oven in peak condition. Every PizzaMaster oven includes a Start-Up Maintenance Kit designed to support optimal performance and ease of care from day one.

The kit contains essential items: replacement oven bulbs, a stainless-steel cleaning cloth, a non-abrasive sponge for windows and exterior surfaces, and user guides for proper upkeep.

See user instructions on **pages 54 and 56**.









Guides & Tutorials, video →

6.2 Cleaning

6.2.1 Environmentally Friendly Cleaning

PizzaMaster has developed a unique range of cleaning and maintenance products specifically designed for pizza and bakery ovens. These products are easier to use than conventional oven cleaners, help keep your oven looking new longer, and reduce environmental impact.

Product	Part no.	Used for:
Oven Brush, Brass Bristles 130cm (51 in)	50053-130	**Cleaning the ovens hearth stones** from soot and baking debris.
Oven Brush, Brass Bristles 160cm (63 in)	50053-160	**Cleaning the ovens hearth stones** from soot and baking debris.
Cleaning cloth package	50341	**Removing burned soot from ovens stainless steel exterior** no more need for oven cleaners when removing hard burned soot or deposits, this cloth cleans the ovens stainless steel exterior dry without the use of any water or cleaning fluids.
Cleaning sponge package	50716	**Regular exterior cleaning and cleaning oven door glass** sponge for regular exterior cleaning and oven door glass. One side is soft, the other side is slightly abrasive for tougher cleaning.

For additional cleaning parts or accessories contact your local PizzaMaster representative

Important!

Conventional non-toxic oven cleaners may be used, however for best results and to avoid damage to stainless surfaces, we recommend PizzaMaster cleaning products.

Cleaning and Maintanence, video →

6 Maintenance

6.2.2 Daily



1. **Prepare Solution**
   Dampen a non-abrasive sponge in a solution of dish liquid and water. Use a soft cloth to dry.

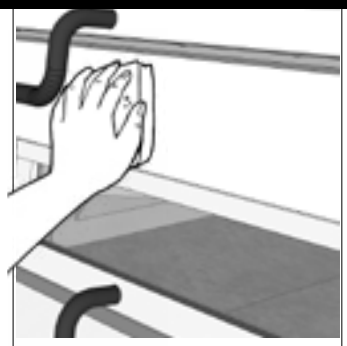

2. **Clean Surfaces**
   Clean the stainless steel front exterior, door handles, display, glass, and shelves. Dry with a soft cloth.

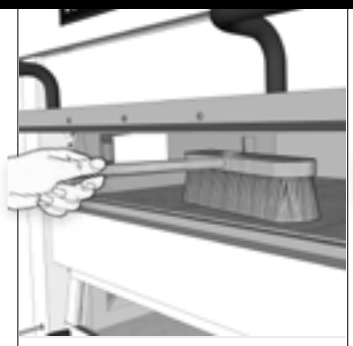

3. **Clean Stone**
   Brush and scrape out bake deposits or soot throughout the day. Use a brass-bristle brush. **DO NOT** use water or detergents on the stone.

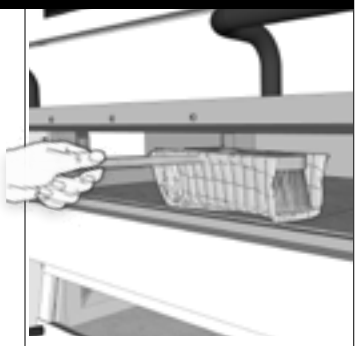

4. **Brush Wrapped**
   It is possible to use a cloth lightly dampened with water and wrapped around the head of the brush.

6.2.3 Weekly

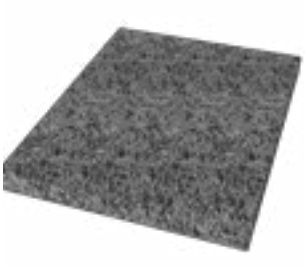

1. **Cleaning Cloth**
   The PizzaMaster cleaning cloth is designed specifically for stainless steel surfaces. **Do not use on Phantom Black finishes.**

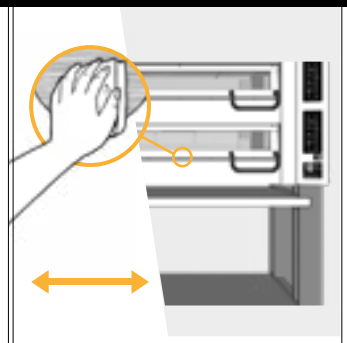

2. **Clean Surfaces**
   Clean all the stainless steel surfaces with the cloth, always with grain direction. **DO NOT** use over glass, display, handles or labels!



3. **High-Temperature Lubricant**
   Use a non-toxic high temperature lubricant.



4. **Lubricate**
   Lubricate all the door bushings.

6.2.4 Yearly



1. **Clean Oven Chamber**
   Wait until the oven is completely cold and remove the stones; lift up the stones using a flat screwdriver.



2. **Vacuum Oven Chamber**
   Vacuum the chamber and place the stones back into the exact in the same position and deck location.

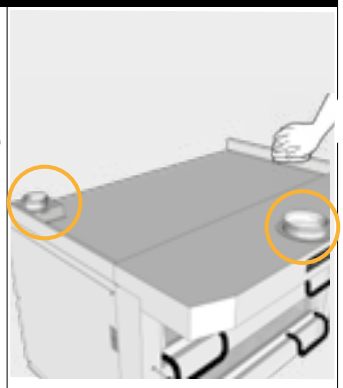

3. **Ventilation Outlets**
   Clean soot and residues from the front and back top ventilation outlets.

Important!

Always clean in the direction of the grain.



6.2.5 Steam System Cleaning

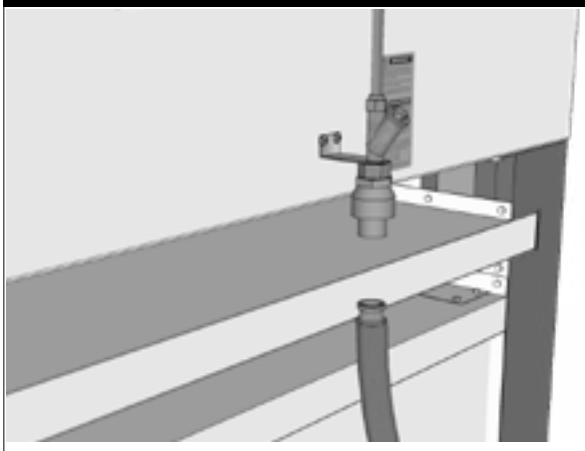

1. Turn off the water supply and disconnect the hose from the oven.

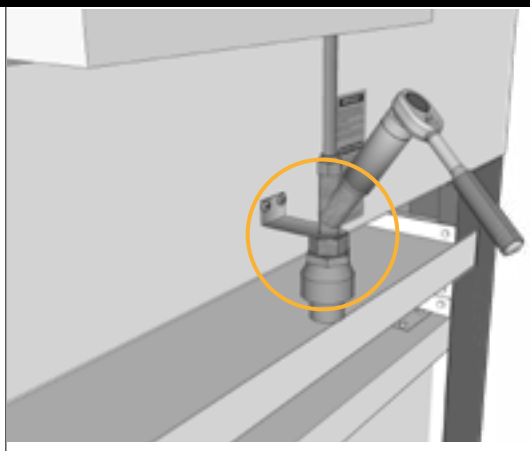

2. Open the filter on the backflow valve.

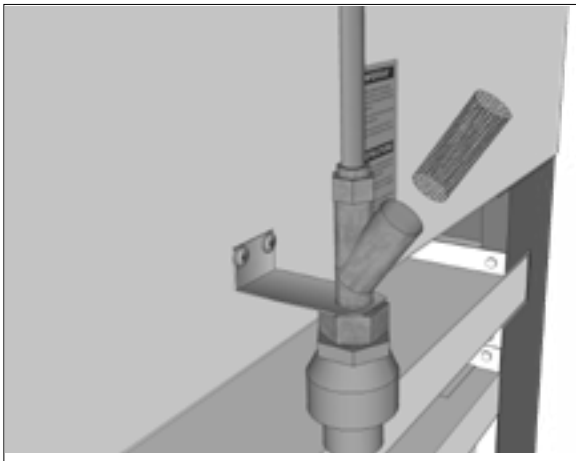

3. Take out the filter and clean it with clean water.

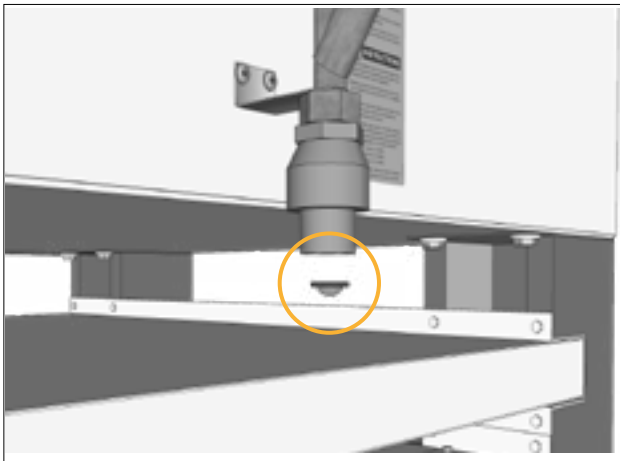

4. Take out the filter from the Water Block Safety valve and clean it with clean water. Repeat the "Installation steps" (**page 34**) before using the Steam System.

6.2.6 Steam System – Reset Water Blocker

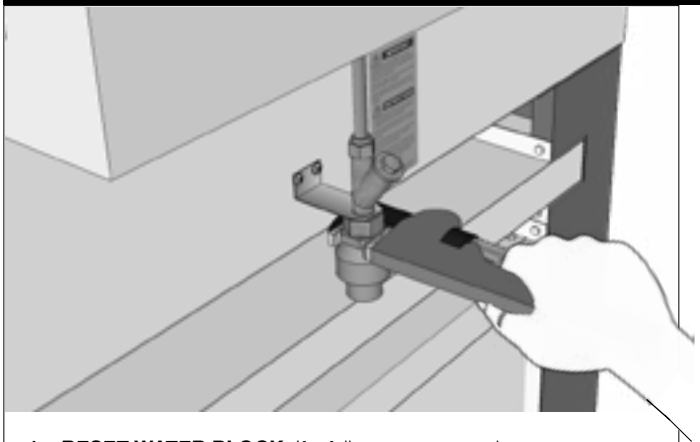

1. RESET WATER BLOCK: If a failure occurs causing a continuous water leak, the Water Block will shut off. Use a suitable wrench to remove the Water Block safety valve.



2. Press the red plunger to reset the Water Block. Repeat the "Installation steps" before using the Steam System. **See page 25**.

Note: *After resetting the Water Block Safety valve, ensure there are no leaks before restoring water supply.*

6.3 Replacement of Wear Parts

6.3.1 Oven Lamps

Warning!

Never try to change the oven lamp when the oven is hot as this can lead to severe burn injuries.

Important!

Never touch the oven lamp bulb with your bare fingers, as this will significantly shorten its lifespan. Use gloves, a piece of paper, or a clean cloth to hold the lamp when replacing it.

Never use any lamp other than the original oven lamps supplied by your PizzaMaster representative or directly from PizzaMaster. Using non-approved lamps may damage the transformer or lamp socket.

Always replace both bulbs in the same oven chamber at the same time to ensure full lifespan and consistent performance.

Oven Lamp, video →

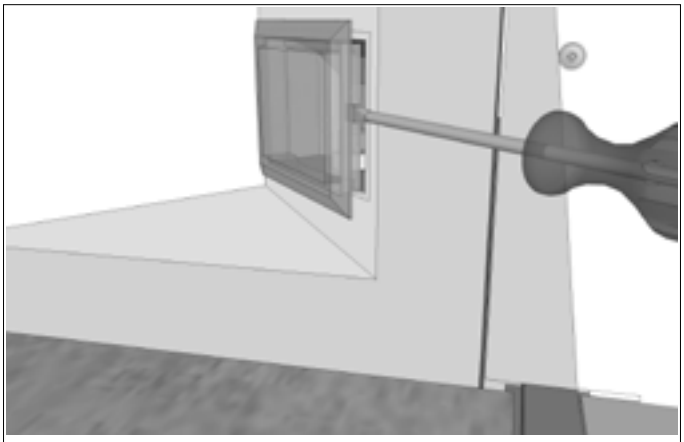

1. Carefully remove the glass with a flat screwdriver. **Do not allow the glass to fall on the stone.**

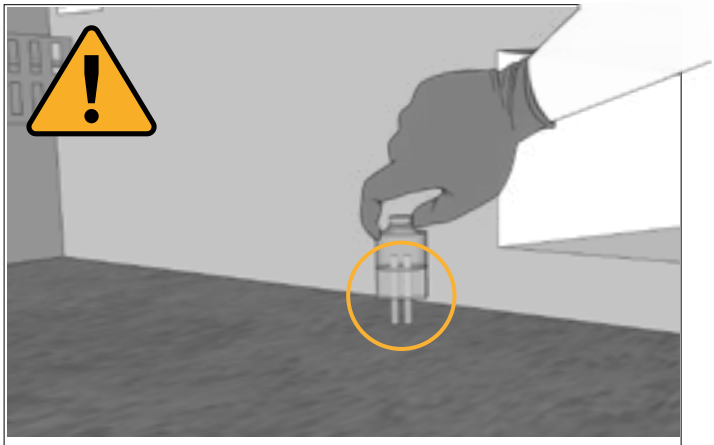

2. Take out the defective bulb. Make sure both pin legs are removed. If one or more of the pin legs get stuck, it's possible to remove with a curved nose pliers. Scan QR link above for video instructions.

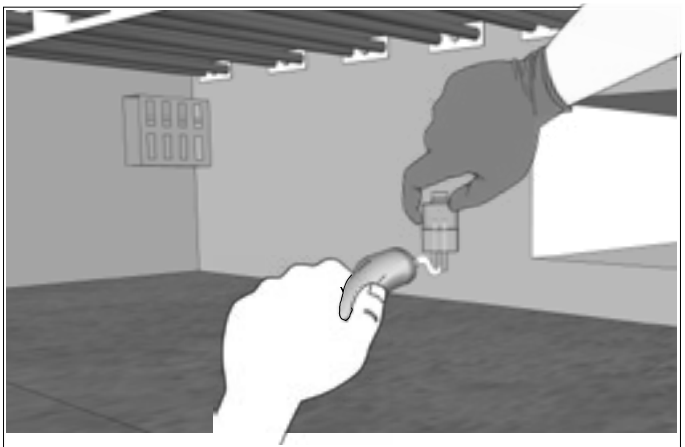

3. Apply a very thin layer of copper paste to the bulb pins only. Avoid getting paste on the bulb glass. **Never touch the new bulb with bare fingers.**

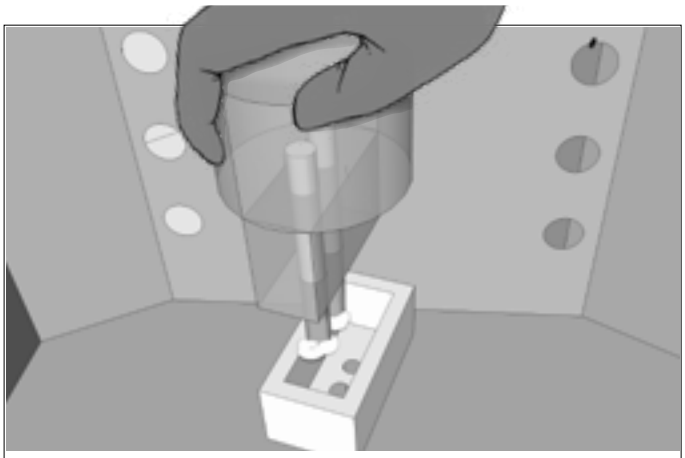

4. Place the new lamp into the lamp socket. **Never touch the new lamp directly with your fingers.** Fit back the lamp glass.

6.3.2 Door Gasket



1. Wait until the oven is at room temperature. Open the door.

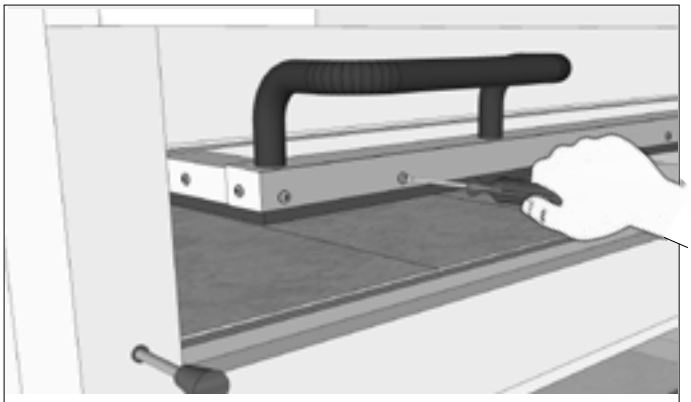

2. For replacement of door gasket it is necessary to use a screwdriver with Phillips head.

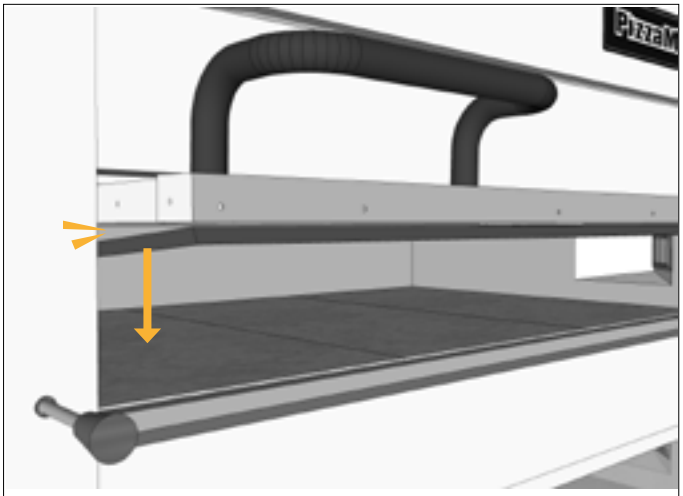

3. Remove the gasket. Make sure that the old gasket is fully removed.

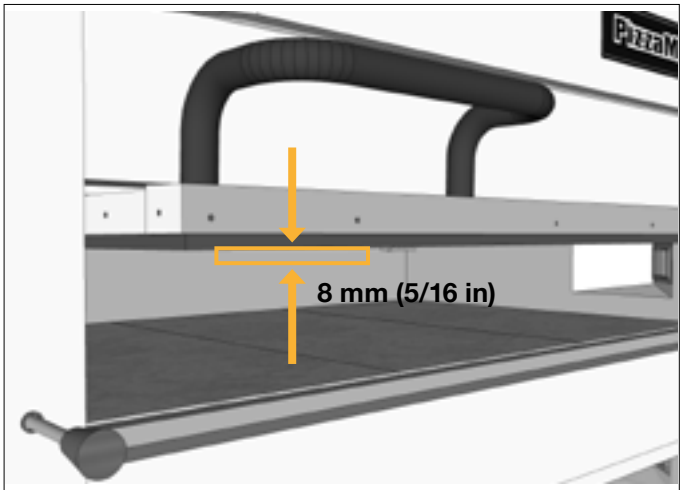

4. Place the gasket in the gap between the door frame and the stainless steel parts. Make sure the gasket is left out with 8 mm (0,3 in). Fasten gasket and stainless steel parts by attaching all screws.

Door Gasket Modular video guide →

7 Troubleshooting

7.1 Start-Up problems

Symptom	Possible cause	Solution
Oven does not start at all; no lights in chambers and displays are completely black.	**1.** Main switch is turned OFF.	Turn ON main switch.
	2. Bottom deck internal circuit breaker F101 has tripped.	Reset breaker.
	3. Display cable not connected to PCB.	Connect display cable and restart oven.
	4. PCB not connected to power (green socket).	Check L1 voltage at deck 1, terminal X100. If no voltage is present, inspect the external breaker or external safety switch (outside the oven).
	5. PCB glass fuse has been overloaded on one or more deck.	Check PCB glass fuses on all decks and replace if broken. Verify voltage before starting the oven. Broken fuses are usually caused by faulty electrical or voltage connections.
	6. PCB has been overloaded. A broken PCB is often recognized by a slightly rounded top of the PCB's black transformer.	Check voltage, the most common cause to a broken PCB board is afaulty electrical/voltage connection.
One or more oven decks do not start; "OFF" is shown on the display.	**1.** ON/OFF button on display panel is damaged.	Replace display panel.
	2. 7-day Auto timer function is activated (Auto LED is lid up green) next to ON/OFF button on the decks display.	Press and hold the display ON/OFF button until the Auto LED is turned off, then start the deck by pressing the ON/OFF button.
	3. If equipped with 7-day Auto start/ stop timer, settings are incorrect or timer is broken.	Confirm timer settings (**page 46**). If correctly configured, perform a factory reset (**page 49**). If still non-functional, replace the timer.
The oven starts, but one or more decks do not heat.	**1.** Set temperature is not increased.	Increas temperature.
	2. Top and/or bottom heat zone intensity is set to 0.	Increase heat zone intensity settings. (Never set the Top Heat Intensity lower than 3)
	3. One or more external breaker (outside of oven) has tripped.	Check voltage on all phases to all decks. If voltage is missing on any phase, check external breakers.
	4. Internal circuit breaker for heaters has tripped (F100).	Turn OFF the oven using the main switch, reset the circuit breakers, then turn ON the oven.
	5. One or more contactors are damaged.	Check outputs L1/T1, L2/T2, L3/T3 on all contactors.
	6. One or more PCBs are damaged.	Check PCB outputs K1, K2 and K3. Voltage should be present when the Turbo light is ON, and absent when the Turbo and Power lights are OFF.
	7. Overheat protection system has been activated (Indicated with red service light in bottom left corner of display).	If the red service light is active, check the condition of the contactor and PCBs. Replace any defective components and reset the circuit breaker.

7.2 Operation Problems

Symptom	Possible cause	Solution
One or two oven lights (per deck) do not work, but the oven deck heats normally.	**1.** One or more oven lamp bulbs are broken.	Replace both oven lamp bulbs in the affected deck (**see page 56**).
	2. The PCB lamp output terminal may be damaged.	Check voltage between terminals (“LA” on green connector to the PCB board). Voltage should be 200–250 V. If not, replace the PCB board.
	3. If both lamps are not illuminated, check the lamp transformer. Use only original lamp bulbs. Bulbs with higher wattage can cause transformer failure.	Measure voltage at porcelain terminal X115. If no voltage is present, replace transformer.
	4. If the bulb, PCB, and transformer are confirmed to be OK but there is still no light, the lamp socket is defective.	Replace the lamp socket.
When starting all decks, one of the decks does not heat up immediately; Turbo Mode is active on all decks.	**1.** Oven might be equipped with Power Guard option.	With Power Guard option, primary deck needs to reach selected baking temperature before secondary deck will heat up.
Oven does not start automatically with the 7-day Auto Start/Stop timer.	**1.** Auto start function is not enabled in display panel.	Check green LED in display. If inactive, press and hold ON/OFF button on display panel until it lights up.
The wrong number of decks start with the 7-day Auto Start/Stop timer.	**1.** Auto start function is not enabled in display panel for all decks.	Check green LED in display. If inactive, press and hold ON/OFF button on display panel until it lights up.
Oven starts at the wrong time with the 7-day Auto Start/Stop timer option.	**1.** Timer settings are not correctly configured.	Check timer settings. Refer to ‘7-Day Auto Start/Stop Timer’ (**page 46**).
Oven sometime does not start with 7-day Auto Start/Stop timer option.	**1.** Timer settings are not correctly configured.	Check timer settings. Refer to ‘7-Day Auto Start/Stop Timer’ (**page 46**).
7-day Auto timer is correctly configured but does not work.	**1.** The override function is activated in the timer.	Check timer settings. Refer to ‘7-Day Auto Start/Stop Timer’ (**page 46**).
	2. Timer is damaged.	Replace the timer.
7-day Auto Start/Stop timer button does not respond to commands.	**1.** Timer Is damaged.	Press the button using a pencil or similar non-conductive tool instead of fingers. If the buttons still do not respond, replace the timer.

7.2 Operation Problems

Symptom	Possible cause	Solution
The oven temperature continues to increase and does not return to the set value while the Turbo-Start and Power indicator lights are OFF.	**1.** One or more contactors are damaged.	Check outputs L1/T1, L2/T2, L3/T3 on all contactors. When Power light is OFF, voltage should be 0V.
	2. One or more PCBs are damaged.	Check outputs K1, K2 and K3 on PCB. When Power light is OFF, voltage should be 0V.
Oven continues heating even when turned off.	**1.** One or more contactors are damaged.	Check outputs L1/T1, L2/T2, L3/T3 on all contactors. When Power light is OFF, voltage should be 0V.
“CAL” is displayed instead of temperature.	**1.** The oven is set to calibration mode.	Set PCB DIP switch 1 (Setup) to OFF, then restart oven.
“OH” is displayed instead of temperature.	**1.** Over Heat protection system has been activated.	Turn OFF the oven using the main switch, reset the internal circuit breakers, then turn ON the oven.
	2. Over Heat protection system has been activated due to contactor failure.	Check outputs L1/T1, L2/T2, L3/T3 on all contactors. When Power light is OFF, voltage should be 0V.
	3. Over Heat protection system has been activated due to PCB failure.	Check outputs K1,K2 and K3 on PCB When Power light is OFF, voltage should be 0V.
The display panel buttons do not respond and/or behave erratically.	**1.** The display panel buttons are damaged.	Replace the display panel.
Display panel shows unusual or unreadable information.	**1.** Power source has been interupted.	Restart oven with main switch.
	2. Display cable is damaged.	Replace the display cable.
	3. Display panel is damaged.	Replace the display panel.
	4. PCB is damaged.	Replace the PCB.
One or more oven decks temporarily overshoot the set temperature by up to 50°C (90°F) before stabilizing.	**1.** Door has been open for an extended period, causing temperature overshoot.	Keep the door closed at all times, except when loading or unloading the oven.
Oven turned istelf OFF	**1.** 7-day start/stop timer option is activated.	Check timer settings. Refer to ‘7-Day Auto Start/Stop Timer’ (**page 46**).
	2. Phase L1 on deck 1 has been disconnected.	Check voltage for L1 in deck 1, terminal X100, if no voltage, check external breaker or external safety switch (outside of oven).
	3. Display panel button ON/OFF is damaged.	Replace display panel.

7.3 Baking Problems

Symptom	Possible cause	Solution
The bottom of the pizza is too dark.	**1.** The balance between top heat intensity and bottom heat intensity is incorrect.	Review the heat zone intensity settings. Refer to Operation – Display ED (**page 36**) and Baking Guidelines (**page 50**).
	2. Temperature is too high.	Review temp settings. Refer to Operation – Display ED (**page 36**) and Baking Guidelines (**page 50**).
	3. The oven has been empty for an extended period of time.	Adjust settings according to load: -Lower heat settings during idle or low-load periods. -Increase heat settings during busy hours.
	4. Not all positions in the oven are used.	Create a loading pattern that uses all oven positions evenly.
	5. Temperature is too high in relation to pizza dough recipe.	Refer to Baking Guidelines (**page 50**).
	6. The choosen baking stone is not suitable for the selected baking temperature.	Replace the stone or adjust temperature and heat zone intensity settings. Refer to stone recommendations by baking temperature in Baking Guidelines (**page 50**).
The top of the pizza is too dark.	**1.** The balance between top heat intensity and bottom heat intensity is incorrect.	Review the heat zone intensity settings. Refer to Operation – Display ED (**page 36**) and Baking Guidelines (**page 50**).
	2. The temperature is set too high.	Decrease temperature.
	3. The baking time is too long.	Decrease baking time.
	4. The oven has been busy for too long.	Let the oven rest empty for a few minutes.
	5. The chosen baking stone is not suitable for the selected baking temperature.	Replace the stone or adjust temperature and heat zone intensity settings. Refer to stone recommendations by baking temperature in Baking Guidelines (**page 50**).
	6. Not all oven positions are used.	Create a loading pattern that uses all oven positions evenly.
Both top and bottom of the pizza are too dark.	**1.** The baking time is too long.	Reduce baking time.
	2. Temperature is too high in relation to pizza dough recipe.	Refer to Baking Guidelines (**page 50**).
The pizza is too wet.	**1.** The ovens ventilation damper is closed.	Open ventilation dampers. Refer to Baking Guidelines, Oven Settings — Important (**page 50**).
	2. Too many wet toppings have been used.	Reduce the amount of topping. Refer to Baking Guidelines (**page 50**).
One side of the pizza is properly baked while the other side is underbaked.	**1.** Uneven pizza placement. Part of the pizza is positioned on a recently used (cooler) area, while another part is on a hotter area retaining more heat.	Create a loading pattern that uses all oven positions evenly. Be aware that larger pizzas (e.g. family-size) cover more stone surface, creating larger cold spots.

7.3 Baking Problems

Symptom	Possible cause	Solution
The bottom of the pizza is too white (unbaked).	**1.** One or more contactors are damaged.	Check all contactor inputs/outputs (L1–L3, T1–T3). Voltage should be present when Turbo light is ON, and absent when Turbo and Power lights are OFF.
	2. Not all positions in the oven are used.	Create a loading pattern that uses all positions in oven equally.
	3. The dough recipe needs to be reviewed.	Refer to Baking Guidelines (**page 50**).
	4. The chosen baking stone is not suitable for the selected baking temperature.	Replace the stone or adjust temperature and heat zone instensity settings. Refer to stone recommendations by baking temperature in Baking Guidelines (**page 50**).
The top of the pizza is too white (unbaked).	**1.** The balance between top heat intensity and bottom heat intensity is incorrect.	Review the heat zone intensity settings. Refer to Operation – Display ED (**page 36**) and Baking Guidelines (**page 50**).
	2. One or more contactors are damaged.	Check all contactor inputs/outputs (L1–L3, T1–T3). Voltage should be present when Turbo light is ON, and absent when Turbo and Power lights are OFF.
	3. One or more external breaker has tripped.	Check voltage for all phases to all decks. If lack of voltage for any phase, check external breakers.
The top and bottom of the pizza are too white (unbaked).	**1.** The temperature is too low.	Increase temperature.
	2. One of more contactors are damaged.	Check all contactor inputs/outputs (L1–L3, T1–T3). Voltage should be present when Turbo light is ON, and absent when Turbo and Power lights are OFF.
	3. One or more external breaker (outside of oven) has tripped.	Check voltage for all phases to all decks, if lack of voltage for any phase, check external breakers.
The pizza crust is too soft.	**1.** The ovens ventilation damper is closed.	Open the ovens ventilation damper.
	2. The dough recipe needs to be reviewed.	Refer to Baking Guidelines (**page 50**).
The pizza is underbaked at the front of the oven.	**1.** Deck has developed hot and cold spots due to inconsistent loading.	Use a consistent loading pattern to maintain deck temperature and achieve even baking.
	2. Auto calibration of Top Front heat zone intensity has been turned off.	Turn Auto mode back ON. Contact you local PizzaMaster dealer or email helpdesk@pizzamaster.com for support.
	3. The balance between top heat intensity and bottom heat intensity is incorrect.	Review the heat zone intensity settings. Refer to Operation – Display ED (**page 36**) and Baking Guidelines (**page 50**).
	4. One or more contactors are damaged.	Check contactors all in- and outputs (L1-L3 and T1-T3). When Turbo light is ON, voltage should be applied. When Turbo and Power light is OFF, voltage should NOT be applied.
	5. The draft connected to the oven's ventilation system is too strong.	Reduce draft. Refer to Installation – Ventilation (**page 32**).
	6. The external ventilation (cooling) system is directed toward the oven doors.	Change angle of ventilation (cooling) system.
	7. The operator frequently checks the pizzas and opens the door too often.	Keep door closed between loads, use baking timer.
	8. The door seal is worn or damaged.	Replace door sealing.

7.3 Baking Problems

Symptom	Possible cause	Solution
The pizza is overbaked at the front of the oven.	**1.** Deck has developed hot and cold spots due to inconsistent loading.	Use a consistent loading pattern to maintain deck temperature and achieve even baking.
	2. The ovens Vent Control Level is closed.	Open Vent Control Lever.
	3. The balance between top heat intensity and bottom heat intensity is incorrect.	Review the heat zone intensity settings. Refer to Operation – Display ED (**page 36**) and Baking Guidelines (**page 50**).
	4. One or more contactors are damaged.	Check all contactor inputs/outputs (L1–L3, T1–T3). Voltage should be present when Turbo light is ON, and absent when Turbo and Power lights are OFF
	5. The draft connected to the oven's ventilation system is too strong.	Reduce draft. Refer to Installation – Ventilation (**page 32**).
Baking time is too long.	**1.** Baking temperature is too low for the selected dough recipe.	Review baking temperature settings. Refer to Baking Guidelines (**page 50**).
	2. The balance between top heat intensity and bottom heat intensity is incorrect.	Review the heat zone intensity settings. Refer to Operation – Display ED (**page 36**) and Baking Guidelines (**page 50**).
The oven temperature drops excessively, or the recovery time is too long.	**1.** Top heat zone intensity settings are too low.	Increase Top Heat Zones, Refer to Operation – Display ED (**page 36**)
	2. The draft connected to the ovens ventillation is too strong.	Reduce draft. Refer to Installation – Ventilation (**page 32**).
	3. Partial loss of power supply to the oven.	Check voltage for all phases, if any phase is lacking voltage, check external breaker and reset if tripped.
	4. Vent Control Lever is closed when oven is fully loaded.	Open Vent Control Lever.
	5. One or more contactors are damaged.	Check all contactor inputs/outputs (L1–L3, T1–T3). Voltage should be present when Turbo light is ON, and absent when Turbo and Power lights are OFF.
	6. One or more PCB's are damaged.	Check PCB outputs K1, K2 and K3. When Turbo light is ON, Voltage should be present when Turbo light is ON, and absent when Turbo and Power lights are OFF.
	7. Door gasket is worn or damaged.	Replace the door gasket.
Oven temperature overshoots excessively and takes longer than normal to stabilize.	**1.** Door was open for an extended period, causing temperature overshoot	Keep the door closed at all times, except when loading or unloading the oven.
	2. Top heat zone intensity settings are too high.	Refer to Operation – Display ED (**page 36**)

8.1 PM 700 Series

Tables contain external dimensions and net weight.

For full Technical Specification scan QR Link below.

	Description		Unit		721		722		723		724		725	
PM 72X	Oven Width		mm	in	1125	44,3	1125	44,3	1125	44,3	1125	44,3	1125	44,3
	Height of Oven Only	a) With Hood (standard)	mm	in	547	21,5	886	34,9	1225	48,2	1564	61,6	1903	74,9
		b) Without Hood	mm	in	477	18,8	816	32,1	1155	45,5	1494	58,8	1833	72,2
	Total Oven Height	a) With Hood (standard)	mm	in	1649	64,9	1818	71,6	1902	74,9	1987	78,2	2194	86,4
		b) Without Hood	mm	in	1579	62,2	1748	68,8	1832	72,1	1917	75,5	2124	83,6
	Oven Depth, with Hood	a) Eyebrow Hood (standard)	mm	in	1038	40,9	1038	40,9	1038	40,9	1038	40,9	1038	40,9
		b) Extended Hood (option)	mm	in	1208	47,6	1208	47,6	1208	47,6	1208	47,6	1208	47,6
	Oven Depth, without Hood		mm	in	903	35,6	903	35,6	903	35,6	903	35,6	903	35,6
	Net Weight		kg	lbs	180	397	266	586	353	779	422	931	469	1035
	Power Consumption, per deck & depending on voltage		kW		5,9 - 6,9		5,9 - 6,9		5,9 - 6,9		5,9 - 6,9		5,9 - 6,9	

	Description		Unit		731		732		733		734		735	
PM 73X	Oven Width		mm	in	1482	58,3	1482	58,3	1482	58,3	1482	58,3	1482	58,3
	Height of Oven Only	a) With Hood (standard)	mm	in	547	21,5	886	34,9	1225	48,2	1564	61,6	1903	74,9
		b) Without Hood	mm	in	477	18,8	816	32,1	1155	45,5	1494	58,8	1833	72,2
	Total Oven Height	a) With Hood (standard)	mm	in	1649	64,9	1818	71,6	1902	74,9	1987	78,2	2194	86,4
		b) Without Hood	mm	in	1579	62,2	1748	68,8	1832	72,1	1917	75,5	2124	83,6
	Oven Depth, with Hood	a) Eyebrow Hood (standard)	mm	in	1038	40,9	1038	40,9	1038	40,9	1038	40,9	1038	40,9
		b) Extended Hood (option)	mm	in	1208	47,6	1208	47,6	1208	47,6	1208	47,6	1208	47,6
	Oven Depth, without Hood		mm	in	903	35,6	903	35,6	903	35,6	903	35,6	903	35,6
	Net Weight		kg	lbs	227	501	325	716	450	992	495	1091	572	1261
	Power Consumption, per deck & depending on voltage		kW		8,7 - 10,3		8,7 - 10,3		8,7 - 10,3		8,7 - 10,3		8,7 - 10,3	

	Description		Unit		741		742		743		744		745	
PM 74X	Oven Width		mm	in	1839	72,4	1839	72,4	1839	72,4	1839	72,4	1839	72,4
	Height of Oven Only	a) With Hood (standard)	mm	in	547	21,5	886	34,9	1225	48,2	1564	61,6	1903	74,9
		b) Without Hood	mm	in	477	18,8	816	32,1	1155	45,5	1494	58,8	1833	72,2
	Total Oven Height	a) With Hood (standard)	mm	in	1649	64,9	1818	71,6	1902	74,9	1987	78,2	2194	86,4
		b) Without Hood	mm	in	1579	62,2	1748	68,8	1832	72,1	1917	75,5	2124	83,6
	Oven Depth, with Hood	a) Eyebrow Hood (standard)	mm	in	1038	40,9	1038	40,9	1038	40,9	1038	40,9	1038	40,9
		b) Extended Hood (option)	mm	in	1208	47,6	1208	47,6	1208	47,6	1208	47,6	1208	47,6
	Oven Depth, without Hood		mm	in	903	35,6	903	35,6	903	35,6	903	35,6	903	35,6
	Net Weight		kg	lbs	256	564	408	900	528	1165	642	1416	770	1697
	Power Consumption, per deck & depending on voltage		kW		11,6 - 13,7		11,6 - 13,7		11,6 - 13,7		11,6 - 13,7		11,6 - 13,7	

Download Technical Specification,
PM 700 Series →

8.2 PM 800 Series

Tables contain external dimensions and net weight.

For full Technical Specification scan QR Link below.

	Description		Unit		821		822		823		824		825	
PM 82X	Oven Width		mm	in	1250	49,2	1250	49,2	1250	49,2	1250	49,2	1250	49,2
	Height of Oven Only	a) With Hood (standard)	mm	in	547	21,5	886	34,9	1225	48,2	1564	61,6	1903	74,9
		b) Without Hood	mm	in	477	18,8	816	32,1	1155	45,5	1494	58,8	1833	72,2
	Total Oven Height	a) With Hood (standard)	mm	in	1649	64,9	1818	71,6	1902	74,9	1987	78,2	2194	86,4
		b) Without Hood	mm	in	1579	62,2	1748	68,8	1832	72,1	1917	75,5	2124	83,6
	Oven Depth, with Hood	a) Eyebrow Hood (standard)	mm	in	1158	45,6	1158	45,6	1158	45,6	1158	45,6	1158	45,6
		b) Extended Hood (option)	mm	in	1328	52,3	1328	52,3	1328	52,3	1328	52,3	1328	52,3
	Oven Depth, without Hood		mm	in	1023	40,3	1023	40,3	1023	40,3	1023	40,3	1023	40,3
	Net Weight		kg	lbs	238	525	342	754	445	980	499	1101	536	1182
	Power Consumption, per deck & depending on voltage		kW		8,3 - 9,8		8,3 - 9,8		8,3 - 9,8		8,3 - 9,8		8,3 - 9,8	

	Description		Unit		831		832		833		834		835	
PM 83X	Oven Width		mm	in	1662	65,4	1662	65,4	1662	65,4	1662	65,4	1662	65,4
	Height of Oven Only	a) With Hood (standard)	mm	in	547	21,5	886	34,9	1225	48,2	1564	61,6	1903	74,9
		b) Without Hood	mm	in	477	18,8	816	32,1	1155	45,5	1494	58,8	1833	72,2
	Total Oven Height	a) With Hood (standard)	mm	in	1649	64,9	1818	71,6	1902	74,9	1987	78,2	2194	86,4
		b) Without Hood	mm	in	1579	62,2	1748	68,8	1832	72,1	1917	75,5	2124	83,6
	Oven Depth, with Hood	a) Eyebrow Hood (standard)	mm	in	1158	45,6	1158	45,6	1158	45,6	1158	45,6	1158	45,6
		b) Extended Hood (option)	mm	in	1328	52,3	1328	52,3	1328	52,3	1328	52,3	1328	52,3
	Oven Depth, without Hood		mm	in	1023	40,3	1023	40,3	1023	40,3	1023	40,3	1023	40,3
	Net Weight		kg	lbs	286	630	418	921	552	1217	682	1503	788	1737
	Power Consumption, per deck & depending on voltage		kW		12,4 - 14,6		12,4 - 14,6		12,4 - 14,6		12,4 - 14,6		12,4 - 14,6	

	Description		Unit		841		842		843		844		845	
PM 84X	Oven Width		mm	in	2074	81,7	2074	81,7	2074	81,7	2074	81,7	2074	81,7
	Height of Oven Only	a) With Hood (standard)	mm	in	547	21,5	886	34,9	1225	48,2	1564	61,6	1903	74,9
		b) Without Hood	mm	in	477	18,8	816	32,1	1155	45,5	1494	58,8	1833	72,2
	Total Oven Height	a) With Hood (standard)	mm	in	1649	64,9	1818	71,6	1902	74,9	1987	78,2	2194	86,4
		b) Without Hood	mm	in	1579	62,2	1748	68,8	1832	72,1	1917	75,5	2124	83,6
	Oven Depth, with Hood	a) Eyebrow Hood (standard)	mm	in	1158	45,6	1158	45,6	1158	45,6	1158	45,6	1158	45,6
		b) Extended Hood (option)	mm	in	1328	52,3	1328	52,3	1328	52,3	1328	52,3	1328	52,3
	Oven Depth, without Hood		mm	in	1023	40,3	1023	40,3	1023	40,3	1023	40,3	1023	40,3
	Net Weight		kg	lbs	299	659	513	1131	723	1594	941	2074	1125	2481
	Power Consumption, per deck & depending on voltage		kW		15,7 - 18,5		15,7 - 18,5		15,7 - 18,5		15,7 - 18,5		15,7 - 18,5	

Download Technical Specification, PM 800 Series →

8.3 PM 900 Series

Tables contain external dimensions and net weight.

For full Technical Specification scan QR Link below.

	Description		Unit		911		912		913		914		915	
PM 91X	Oven Width		mm	in	1045	41,1	1045	41,1	1045	41,1	1045	41,1	1045	41,1
	Height of Oven Only	a) With Hood (standard)	mm	in	547	21,5	886	34,9	1225	48,2	1564	61,6	1903	74,9
		b) Without Hood	mm	in	477	18,8	816	32,1	1155	45,5	1494	58,8	1833	72,2
	Total Oven Height	a) With Hood (standard)	mm	in	1649	64,9	1818	71,6	1902	74,9	1987	78,2	2194	86,4
		b) Without Hood	mm	in	1579	62,2	1748	68,8	1832	72,1	1917	75,5	2124	83,6
	Oven Depth, with Hood	a) Eyebrow Hood (standard)	mm	in	1260	49,6	1260	49,6	1260	49,6	1260	49,6	1260	49,6
		b) Extended Hood (option)	mm	in	1430	56,3	1430	56,3	1430	56,3	1430	56,3	1430	56,3
	Oven Depth, without Hood		mm	in	1125	44,3	1125	44,3	1125	44,3	1125	44,3	1125	44,3
	Net Weight		kg	lbs	213	470	320	706	434	956	484	1068	511	1127
	Power Consumption, per deck & depending on voltage		kW		7,1 - 8,3		7,1 - 8,3		7,1 - 8,3		7,1 - 8,3		7,1 - 8,3	

	Description		Unit		921		922		923		924		925	
PM 92X	Oven Width		mm	in	1350	53,1	1350	53,1	1350	53,1	1350	53,1	1350	53,1
	Height of Oven Only	a) With Hood (standard)	mm	in	547	21,5	886	34,9	1225	48,2	1564	61,6	1903	74,9
		b) Without Hood	mm	in	477	18,8	816	32,1	1155	45,5	1494	58,8	1833	72,2
	Total Oven Height	a) With Hood (standard)	mm	in	1649	64,9	1818	71,6	1902	74,9	1987	78,2	2194	86,4
		b) Without Hood	mm	in	1579	62,2	1748	68,8	1832	72,1	1917	75,5	2124	83,6
	Oven Depth, with Hood	a) Eyebrow Hood (standard)	mm	in	1260	49,6	1260	49,6	1260	49,6	1260	49,6	1260	49,6
		b) Extended Hood (option)	mm	in	1430	56,3	1430	56,3	1430	56,3	1430	56,3	1430	56,3
	Oven Depth, without Hood		mm	in	1125	44,3	1125	44,3	1125	44,3	1125	44,3	1125	44,3
	Net Weight		kg	lbs	258	569	390	860	508	1119	640	1412	716	1579
	Power Consumption, per deck & depending on voltage		kW		10,1 - 11,9		10,1 - 11,9		10,1 - 11,9		10,1 - 11,9		10,1 - 11,9	

	Description		Unit		931		932		933		934		935	
PM 93X	Oven Width		mm	in	1812	71,3	1812	71,3	1812	71,3	1812	71,3	1812	71,3
	Height of Oven Only	a) With Hood (standard)	mm	in	547	21,5	886	34,9	1225	48,2	1564	61,6	1903	74,9
		b) Without Hood	mm	in	477	18,8	816	32,1	1155	45,5	1494	58,8	1833	72,2
	Total Oven Height	a) With Hood (standard)	mm	in	1649	64,9	1818	71,6	1902	74,9	1987	78,2	2194	86,4
		b) Without Hood	mm	in	1579	62,2	1748	68,8	1832	72,1	1917	75,5	2124	83,6
	Oven Depth, with Hood	a) Eyebrow Hood (standard)	mm	in	1260	49,6	1260	49,6	1260	49,6	1260	49,6	1260	49,6
		b) Extended Hood (option)	mm	in	1430	56,3	1430	56,3	1430	56,3	1430	56,3	1430	56,3
	Oven Depth, without Hood		mm	in	1125	44,3	1125	44,3	1125	44,3	1125	44,3	1125	44,3
	Net Weight		kg	lbs	315	694	483	1064	657	1448	795	1752	948	2089
	Power Consumption, per deck & depending on voltage		kW		15,5 - 18,3		15,5 - 18,3		15,5 - 18,3		15,5 - 18,3		15,5 - 18,3	

	Description		Unit		941		942		943		944		945	
PM 94X	Oven Width		mm	in	2274	89,5	2274	89,5	2274	89,5	2274	89,5	2274	89,5
	Height of Oven Only	a) With Hood (standard)	mm	in	547	21,5	886	34,9	1225	48,2	1564	61,6	1903	74,9
		b) Without Hood	mm	in	477	18,8	816	32,1	1155	45,5	1494	58,8	1833	72,2
	Total Oven Height	a) With Hood (standard)	mm	in	1649	64,9	1818	71,6	1902	74,9	1987	78,2	2194	86,4
		b) Without Hood	mm	in	1579	62,2	1748	68,8	1832	72,1	1917	75,5	2124	83,6
	Oven Depth, with Hood	a) Eyebrow Hood (standard)	mm	in	1260	49,6	1260	49,6	1260	49,6	1260	49,6	1260	49,6
		b) Extended Hood (option)	mm	in	1430	56,3	1430	56,3	1430	56,3	1430	56,3	1430	56,3
	Oven Depth, without Hood		mm	in	1125	44,3	1125	44,3	1125	44,3	1125	44,3	1125	44,3
	Net Weight		kg	lbs	365	805	605	1334	805	1775	1001	2206	1160	2558
	Power Consumption, per deck & depending on voltage		kW		19,7 - 23,2		19,7 - 23,2		19,7 - 23,2		19,7 - 23,2		19,7 - 23,2	

Download Technical Specification, PM 900 Series →

8.4 PM 1100 Series

Tables contain external dimensions and net weight.

For full Technical Specification scan QR Link below.

	Description		Unit		1121		1122		1123		1124		1125	
PM 112X	Oven Width		mm	in	1500	59,1	1500	59,1	1500	59,1	1500	59,1	1500	59,1
	Height of Oven Only	a) With Hood (standard)	mm	in	547	21,5	886	34,9	1225	48,2	1564	61,6	1903	74,9
		b) Without Hood	mm	in	477	18,8	816	32,1	1155	45,5	1494	58,8	1833	72,2
	Total Oven Height	a) With Hood (standard)	mm	in	1649	64,9	1818	71,6	1902	74,9	1987	78,2	2194	86,4
		b) Without Hood	mm	in	1579	62,2	1748	68,8	1832	72,1	1917	75,5	2124	83,6
	Oven Depth, with Hood	a) Eyebrow Hood (standard)	mm	in	1408	55,4	1408	55,4	1408	55,4	1408	55,4	1408	55,4
		b) Extended Hood (option)	mm	in	1578	62,1	1578	62,1	1578	62,1	1578	62,1	1578	62,1
	Oven Depth, without Hood		mm	in	1273	50,1	1273	50,1	1273	50,1	1273	50,1	1273	50,1
	Net Weight		kg	lbs	320	705	488	1075	662	1459	795	1753	974	2148
	Power Consumption, per deck & depending on voltage		kW		13,2 - 15,5		13,2 - 15,5		13,2 - 15,5		13,2 - 15,5		13,2 - 15,5	

	Description		Unit		1131		1132		1133		1134		1135	
PM 113X	Oven Width		mm	in	2037	80,2	2037	80,2	2037	80,2	2037	80,2	2037	80,2
	Height of Oven Only	a) With Hood (standard)	mm	in	547	21,5	886	34,9	1225	48,2	1564	61,6	1903	74,9
		b) Without Hood	mm	in	477	18,8	816	32,1	1155	45,5	1494	58,8	1833	72,2
	Total Oven Height	a) With Hood (standard)	mm	in	1649	64,9	1818	71,6	1902	74,9	1987	78,2	2194	86,4
		b) Without Hood	mm	in	1579	62,2	1748	68,8	1832	72,1	1917	75,5	2124	83,6
	Oven Depth, with Hood	a) Eyebrow Hood (standard)	mm	in	1408	55,4	1408	55,4	1408	55,4	1408	55,4	1408	55,4
		b) Extended Hood (option)	mm	in	1578	62,1	1578	62,1	1578	62,1	1578	62,1	1578	62,1
	Oven Depth, without Hood		mm	in	1273	50,1	1273	50,1	1273	50,1	1273	50,1	1273	50,1
	Net Weight		kg	lbs	362	798	602	1327	802	1767	993	2189	1187	2617
	Power Consumption, per deck & depending on voltage		kW		19,8 - 23,3		19,8 - 23,3		19,8 - 23,3		19,8 - 23,3		19,8 - 23,3	

Download Technical Specification, PM 1100 Series →

Download Center
Scan the QR code to access the latest products and technical information.

Video Library
Scan the QR code to access PizzaMaster's official video library.

Customer Support: Tel: +46 33 230 025
E-mail: helpdesk@pizzamaster.com
Website: www.pizzamaster.com
HQ: Svenska BakePartner AB (PizzaMaster), Odegardsgatan 5, SE 504 64 Boras, Sweden