Manitowoc

INDIGO NXT

QuietQube® iT1200C Remote Ice Cube Machine

Air-Cooled Ice Cube Machine with Patented CVD Technology®

Model

☐ IDT1200C ☐ IYT1200C



IT1200C Ice Cube Machine - 115V



CVD Condensing Unit - 230V



iT1200C Ice Machine on a D570 bin

*Ice machine and bin sold seperately

Ice Shape



Half Dice
⅜" x 1⅛" x ⅞"
(.95 x 2.86 x 2.22 cm)



Dice
⅞" x ⅞" x ⅞"
(2.22 x 2.22 x 2.22 cm)

Standard Features

QuietQube Series Remote System consists of a remote condensing unit, interconnecting refrigerant lines, ice machine head section along with an ice storage bin, countertop dispenser, or floor dispenser. All ordered separately. QuietQube ice machine with CVD condensing unit is designed as a Manitowoc system and cannot be used with any other ice machine or remote condenser brand.

- **New Levels of Performance** – showcasing an average of 8% reduction in energy consumption and 10% increase in ice production.
- **easyTouch® Display** - New icon based touch screen takes the guess work out of owning and operating an ice machine.
- **Programmable Ice Production** – Now its super easy to program your ice machine to be off at certain times of the day to save money with fluctuating electrical rates. Also programmable by daily ice production volume and night time programming.
- **Easy to Clean Foodzone** – Hinged door for easy access. Removable water-trough, distribution tube, curtain, water probe and water pump for fast and efficient cleaning. Selected components are made with AlphaSan® antimicrobial.
- **Intelligent Diagnostics** – Provides 24 hour preventative maintenance and diagnostic feedback for trouble free operation.
- **Acoustical Ice Sensing Probe** – Unique patented technology allows for reliable operation in challenging water conditions and environments
- **DuraTech® Exterior** – Provides superior corrosion resistant above stainless steel. Innovative clear-coat resists fingerprints and dirt making it easier to keep clean.
- **Available LuminIce® II Virus and Bacteria Inhibitor** – Controls viruses, bacteria, mold and yeast within the food zone to keep the machine clean longer. A new sanitation icon lets you know the operational status.
- **Active Sense** – insures consistent ice harvest in all environmental conditions. This software works in conjunction with the acoustical ice sensing probe improving reliability and performance.



CALIFORNIA LOW LEAD QUALIFIED Conforms to NSF 61 Annex G · ARI CERTIFIED · NSF · c UL US LISTED · CE · AQ · ISO 9001:2015 Certification

2110 South 26th Street
Manitowoc, WI 54220

Tel: 1.920.682.0161
Fax: 1.920.683.7589

www.manitowocice.com

QuietQube® iT1200C Remote Ice Cube Machine

Air-Cooled Ice Cube Machine with Patented CVD Technology®

QuietQube® iT1200C Remote Ice Cube Machine

Air-Cooled Ice Cube Machine with Patented CVD Technology®

iT1200C Ice Machine

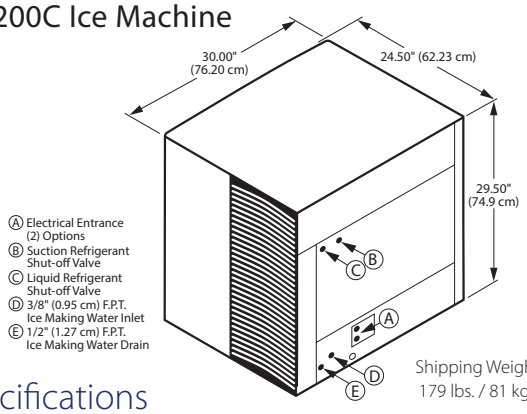

Shipping Weight: 179 lbs. / 81 kgs.

Specifications

Operating Limits:

- Ambient Temperature Range: 40˚ to 110˚F (4.4˚ to 43.3˚C)
- Water Temperature Range: 40˚ to 90˚F (4.4˚ to 32.2˚C)
- Water Pressure Ice Maker Water In: Min. 20 psi (137.9 kPA) Max. 80 psi (551.1 kPA)

Installation Note Minimum Installation Clearance:
Top/sides: 5" (12.7 cm)
Back is 5" (12.7 cm)

Ice Machine Electric

115/60/1 standard.
Total Amps: 1.1
Max. fuse size: 15 amps
HACR-type circuit breakers can be used in place of fuses.

LuminIce® II Virus and Bacteria Inhibitor Accessory

controls viruses and bacteria inside the ice machine

iAuCS® Accessory

schedules and performs routine ice machine cleaning automatically.



Remote Air-cooled Ice Machine

Model	Ice Shape	Ice Production 24 Hours		Power kWh/ 100 lbs* @ 90°/70°F
		70°Air/ 50°F Water	90°Air/ 70°F Water	
IDT1200C	dice	1,130 lbs.	930 lbs.	4.60
		513 kgs.	422 kgs.	
IYT1200C	half-dice	1,155 lbs.	955 lbs.	4.60
		525 kgs.	433 kgs.	
Potable Water: 19.9 gallons, 75.3 liters				

Ice machine for use with ice storage bin or ice dispenser and CVD condensing unit all ordered separately.

**kWh per 100 lbs. is total power of ice machine and condensing unit. Ice machine is 1 ph only. Condensing unit is 1 ph or 3 ph.*

CVDT1200 Remote Condensing Unit

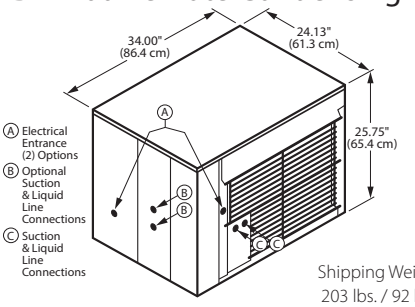

Shipping Weight: 203 lbs. / 92 kgs.

Condensing Unit Electric

208-230/60/1 standard. 208-230/60/3. HACR-type circuit breakers can be used in place of fuses.
Note: QuietQube ice machine power supply is wired independent of CVD condensing unit.

Min. circuit ampacity: *(Refer to Data Plate)*
14.8 amps *1ph* 9.3 amps *3ph*

Max. fuse size: *(Refer to Data Plate)*
25 amps *1ph* 15 amps *3ph*

HACR-type circuit breakers can be used in place of fuses.

Operating Limits:

- Ambient Temperature Range: -20˚ to 120˚F (-29˚ to 49˚C)

BTU Per Hour:
16,200 (average) 19,100 (peak)

Compressor:
Nominal rating: 1.5 HP

Installation Information and Dimensions:
Maximum Line Length
—100' (30.5 m).*
Maximum Vertical Rise*
—35' (10.7 m) above ice machine.
Maximum Vertical Drop
—15' (4.5 m) below ice machine.

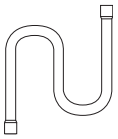

**A rise over 20' (6 m) requires S-Trap Kit K-00172 - ordered separately.*

Model	Line Length		Weight	
	ft.	m.	lbs.	kgs.
RC-21	20	6	12	5
RC-31	30	9	20	9
RC-51	50	15	28	13

Arcti Pure Plus Water Filters

AR-PRE-P

Filters dirt, rust and hard sediments down to 5 micron.



AR-40000-P

Ultra fin filtration reduces chlorine and contaminants down to 0.5 microns. Use of a pre-filter is recommended.



Manitowoc Ice reserves the right to make changes to the design or specifications without prior notice.

2110 South 26th Street
Manitowoc, WI 54220

Tel: 1.920.682.0161
Fax: 1.920.683.7589

www.manitowocice.com

6491F-2 7/26