

# KP1000

## Koolaire Ice Cube Machine

KDP1000A | KYP1000A | KDP1000W | KYP1000W

## ICE SHAPES



- **Half-Dice:** 3/8" x 1⅛" x 7/8" (0.95 x 2.86 x 2.22 cm)



- **Dice:** 7/8" x 7/8" x 7/8" (2.22 x 2.22 x 2.22 cm)

## SIZE

- Up to 880 lbs (399 kgs) of daily ice production
- 30" (76.20 cm) wide, 34" (86.36cm) deep, and 59.5" (151.13 cm) high including 6" (15.24 cm) legs
- 532 lb (241 kgs) ice bin storage capacity*

*Application capacity based on 90% volume x 33 lbs./ft$^3$ average density of ice

Koolaire KP1000 Ice Cube Machine on K570 Bin.
Ice machine and bin sold separately.

## SPECIFICATIONS

### Refrigerant: R290

- Air-cooled: 14.1 oz (400 g)
- Water-cooled: 14.1 oz (400 g)

### BTU Per Hour

- 14,080 (average)
- 16,340 (peak)

### Operating Limits

- Ambient temperature range: 40˚ to 110˚F (4.4˚ to 43.3˚C)
- Water temperature range: 35˚ to 90˚F (1.7 to 32.2˚C)
- Water pressure ice maker (water in)
  - Min. 20 psi (137.9 kPA)
  - Max. 80 psi (551.1 kPA)
- Condenser inlet water in (water-cooled only)
  - Min. 20 psi (137.9 kPA)
  - Max. 275 psi (1,896.06 kPA)

### Power

- 203-208/60/1 standard
- Minimum circuit ampacity:
  - Air-cooled: 8.6
  - Water-cooled: 7.9
- Maximum Fuse Size
  - Air Cooled: 15 Amps
  - Water cooled: 15 Amps

## FEATURES / BENEFITS

- AHRI performance certified
- Energy-efficient model (see EnergyStar.gov)
- Durable nickel-plated copper evaporators (Made in Manitowoc, WI)
- Simple 3-position control: ON / OFF / CLEAN
- Smudge-resistant stainless-like exterior
- R290 offers a 99.86% GWP reduction compared to R410A
- Front-facing evaporator for easy access
- One-touch cleaning—just add chemical, no ice removal needed
- Tool-free removal of food zone components
- Smooth, white plastic interior for quick wipe-downs
- Sealed food zone with commercial-grade gaskets
- Alpha San antimicrobial protection in key parts

## ACCESSORIES

- LuminIce® II Virus and Bacteria Inhibitor
  controls viruses and bacteria in the ice machine
- Dispenser Bin Thermostat Kit
  Reduces condensation when used with dispensers
- Arctic Pure® Pro Water Filters
  Reduces sediments and chlorine contaminants down to 0.5 microns
  Use with a pre-filter is recommended



Luminice II


Thermostat Kit


Arctic Pure Water Filters

KOOLAIRE
FROM MANITOWOC

# KP1000

## Koolaire Ice Cube Machine

KDP1000A | KYP1000A | KDP1000W | KYP1000W

## INSTALLATION

Ice machine must be installed indoors.

Required clearance for
- Top / Sides: 8" (20.3 cm)
- Back: 5" (12.7 cm)

**A** Electrical Entrance (2) Options

**B** 3/8" (0.95 cm) F.P.T.
Ice Making Water Inlet

**C** 1/2" (1.27 cm) F.P.T.
Ice Making Water Outlet

**D** 1/2" (1.27 cm)
Condenser Water Outlet
(water cooled units)

**E** 3/8" (0.95 cm) F.P.T.
Condenser Water Inlet
(water cooled units)

**F** 3/4" (1.91 cm)
Bin Drain

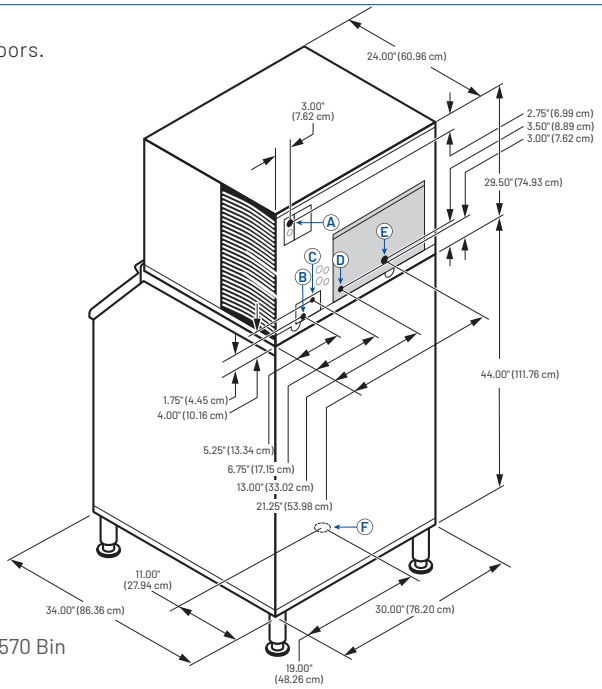


KP1000 on K570 Bin

## SPACE-SAVING DESIGN



| | KP1000 K570 |
|---|---|
| Height | 79.50" 202.93 cm |
| Width | 30.0" 76.2 cm |
| Depth | 34.0" 86.30 cm |
| Bin Storage | 532 lbs 241 kgs |

Height includes adjustable bin legs 6.00" to 8.00", (15.24 to 20.32 cm) set at 6.00" (15.24 cm).

Bin capacity is based on 90% of the volume x 33 lbs/ft³ average density of ice.

Ice machine and bin sold separately.

## SPECIFICATIONS

| | Model | Ice Shape | Shipping Weight | Ice Production 24 Hours: 70°Air/50°F Water 21°Air/10°C Water | Ice Production 24 Hours: 90°Air/70°F Water 32°Air/21°C Water | Power Usage kWh per 100 lbs of ice @ 90° Air/70°F Water (32° Air/21°C Water) | Ice Machine Potable water usage per 100 lbs ice @ 90° Air/70°F Water (32° Air/21°C Water) | Condenser water usage per 100 lbs ice @ 90° Air/70°F Water (32° Air/21°C Water) |
|---|---|---|---|---|---|---|---|---|
| Air Cooled | KDP1000A | Dice | 206 lbs (93 kgs) | 846 lbs (383.7 kgs) | 630 lbs (286 kgs) | 4.7 ★ | 14 gal (53 L) | N/A |
| Air Cooled | KYP1000A | Half-Dice | 206 lbs (93 kgs) | 880 lbs (399.2 kgs) | 688 lbs (312 kgs) | 4.41 ★ | 14 gal (53 L) | N/A |
| Water Cooled | KDP1000W | Dice | 203 lbs (92 kgs) | 831 lbs (377 kgs) | 719 lbs (326 kgs) | 3.46 | 14.3 gal (54.1 L) | 125 gal (473.2 L) |
| Water Cooled | KYP1000W | Half-Dice | 203 lbs (92 kgs) | 866 lbs (393 kgs) | 740 lbs (336 kgs) | 3.54 | 14.4 gal (54.5 L) | 125 gal (473.2 L) |

R290 is a refrigerant grade propane which is naturally occurring with no ozone depletion potential and extremely low global warming potential.

★ Energy Star Model

### Limited Commercial Warranty

**Ice Maker** Three (3) years parts and labor

**Evaporator** Five (5) years parts and labor

**Compressor** Five (5) years parts, three (3) years labor

KOOLAIRE
FROM MANITOWOC


**2110 South 26th Street | Manitowoc, WI 54220 | United States**
**+1.920.682.0161 | 920.683.7589 Fax | manitowocice.com**



All indicated Pentair trademarks and logos are property of Pentair. Third party registered and unregistered trademarks and logos are the property of their respective owners. ©2025 Pentair. All rights reserved.