KILOTECH
Easy to use reliable scales

LE.3K INTEGRATOR



K851340 – LE.3k Integrator Multi-interval 0-15 kg x 0.005 kg & 15-30 kg x 0.01 kg 0-30 lb x 0.01 lb & 30-60 lb x 0.02 lb GTIN 888960513408

USB RS-232

www.kilotech.com

Key features

30 kg or 60 lb Capacity

Label Printing

High Contrast LCD Screens

Easy to Set Up and Use

Don’t have the time to create custom labels and barcodes?

The LE.3k comes with a variety of pre-set pricing and nutritional facts labels. Simply add in your data and logo and you are ready to go.

Want to bring your branding to the next level?

20 different pre-programmed barcodes formats, in addition to QR codes, shelf-life data, packed for/by, cooking instructions, allergy warnings, country of origin etc…



Is training your staff cumbersome?

It doesn't have to be. The LE.3k is simple to use and even has a QR code right on the scale that brings your staff directly to our training videos and materials. 126 Fast programming keys so they can quickly access frequently used features. Your vendor can set up your scale so your staff only have access to the data they need.

Want data quickly, so you can make well informed business decisions?

All your PLU data can be viewed on a single screen. Customize your reports to contain all the information you require to make business decisions using item, sales, operator, inventory, and Z reports. Produce detailed batch reports for billing and record keeping. Accumulate transactions. Generate shipping manifests and create stock orders. Easily transfer data off the scale to your PC with a USB key, via WI-FI or TCP/IP.



Using your scale in various parts of the store or at various stores?

Centralized software application to set up or make changes to your scale(s). Ensure consistency amongst terminals and centrally collect data for reporting. Download to Excel and upload to your ERP, or vice versa, using our software!

SPECIFICATIONS

Product Number	K851340 / K881340
Product Name	Integrator LE.3k
Capacity - Multi-Interval	15/30 kg 30/60 lb
Graduation - Multi-Interval	0-15 kg: 0.005 kg / 15-30 kg: 0.01 kg 0-30 lb: 0.01 lb / 30-60 lb: 0.02 lb
Weighing Modes	kg, lb
Display	Display Pole mounted, window displays including 4 LCD screens and a dot matrix text screen for PLU descriptions
Display Digits	Display Digit 4 digit Tare / 5 digit Weight / 6 digit Unit Price / 6 digit Total Price
Power	21VDC, AC adaptor
Product Dimensions	17 x 19 x 20" / 43 cm x 48 cm x 51 cm (See Diagram)
Platter Size	15.5 x 10" / 39 x 25 cm
Operating Temperature / Humidity	0°C-40°C / 50°F-104° F<60% RH non condensing 15% -85% Relative humidity non condensing
Pricing Units	$/kg, $/100g, $/lb, pcs
Unit price range	0.00-9999.99$/kg or $/lb
Total price range	0-999.99$ (limited by barcode)
USB, Ethernet, WIFI and Serial Port	Yes, USB is for data transfer only
PLU	Max PLU 6500 PLUs (maximum 875 characters per PLU)
Printer Barcode Formats	EAN13, EAN8, UPCA, UPCE, EA-128C, Customized by Authorized Dealer: QR, ITF25, PDF417, EAN-128, EAN28 char mode. As well, 20 preprogrammed barcodes
Printer	Direct Thermal Print - 56 mm print head
Image Formats	Maximum 15 images compatible with all common image files 300 x 200 DPI (black and white) (can not use all 15 on one label): BMP, JPEG, TFT, etc. Customized by Authorized Dealer
Speed Keys	126 with shift key, 63 without shift key
Label Formats	Width: up to 56 mm Length: up to 110 mm 15 Preformatted , 3 sizes gap labels, 2 size labels for Nutritional Facts 58 x 40mm and 58 x 80mm. Nutritional Facts for Canada and USA. Labels are bilingual. Many more size options available for customized labels. Programmed by your Authorized Dealer
Measurement Canada and NTEP approval	AM-5818 / NTEP CC 11-066A4
Warranty	2 year

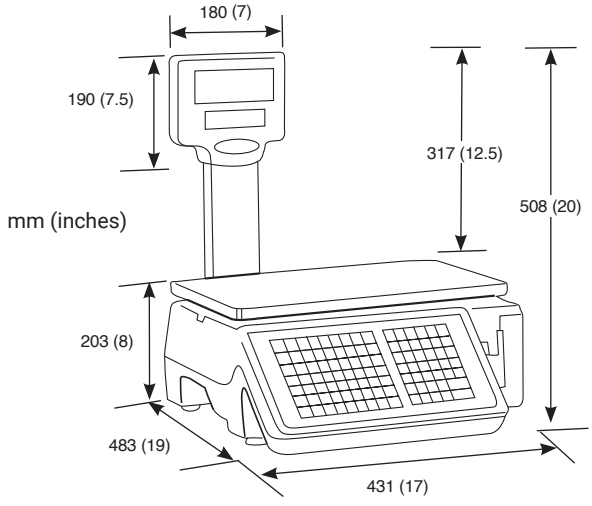

Kilotech Inc.

2111 32nd avenue, Lachine, QC H8T 3J1

Phone Canada: 1-800-694-4445 | Montreal: 1-514-420-6020 | USA: 1-877-328-5988

www.kilotech.com