KILOTECH
Easy to use reliable scales

KT-SP SERIES

Mechanical Beam Scale

Bench model



K850101	KT-SP100/200	100 kg X 0.05 kg	GTIN 888960501016
K850111	KT-SP 100/200	200 lb X 1 oz	GTIN 888960501115

LEGAL•LÉGALE Canada FOR TRADE•POUR LE COMMERCE

NCWM NATIONAL CONFERENCE ON WEIGHTS AND MEASURES

www.kilotech.com

Key features

Tough
Cast Iron
Construction

Rust
Resistant
Brass Beam

Trouble
Free
Maintenance

These legal for trade precision scales are built to last



The KT-SP is ideally suited for use in areas where electronic devices may pose a spark threat

Ideal for: propane filling, chemical and paint plants, fishing plants, shipping and receiving docks - wherever harsh conditions and volatile elements require a rugged mechanical device.

- Counter-weights are colour coded for easy identification.
- A hard wearing finish, tough cast iron construction and rust resistant brass beam will ensure years of trouble free maintenance.





SPECIFICATIONS

Product Number and Name and GTIN	K850101 - KT-SP100/200 - 100 kg x 0.05 kg - GTIN 888960501016 K850111 - KT-SP 100/200 - 200 lb x 1 oz - GTIN 888960501115
Capacity	100 kg 200 lb
Graduation	5 kg (50 g) 10 lb (1 oz)
Measurement Canada and NTEP approval	AM 5649 / CC 08-089
Warranty	6 months

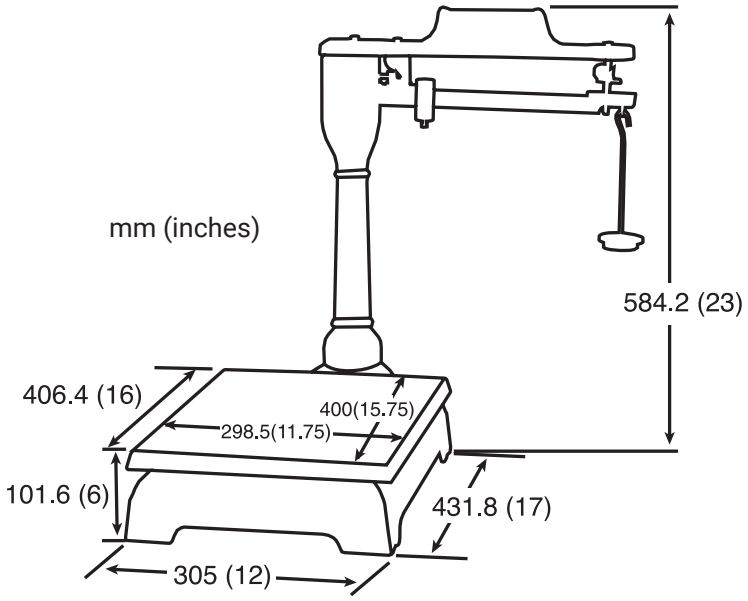

Kilotech Inc.
2111 32nd avenue, Lachine, QC H8T 3J1
Phone Canada: 1-800-694-4445 | Montreal: 1-514-420-6020 | USA: 1-877-328-5988
www.kilotech.com

You can count on your Kilotech scale to ensure profitability, consistency and eliminate wastage. Every time.

