HOBART

Project _____

AIA # _____ SIS # _____

Item # _____ Quantity _____ C.S.I. Section 114000

WEIGH WRAP

HT SCALE SERIES – HTs

HTs
Scale



MODELS

Model	Customer Display	Weigher Capacity	Network
❑ **HTs-LS**	None	30 lb.	wired/wireless
❑ **HTsP-LS**	None	None	wired/wireless
❑ **HTs-7LS**	7"	30 lb.	wired/wireless
❑ **HTs-7ELS**	7" Elevated	30 lb.	wired/wireless

STANDARD FEATURES

+ Video playback on operator display
+ Intuitive and customizable graphical user interface
+ Best seller keys by scale/department
+ Search database by description, key word or PLU number
+ Swipe between screens for operator ease of use
+ Flashkeys can be laid out by categories or groups
+ Product shelf life by days or hours
+ Operator, product, and/or recipe notes
+ Onscreen operator manual and tutorial videos
+ COOL (country of origin labeling) can be created and modified on the scale
+ Ability to require operator login
+ Label graphics visible in supervisor mode
+ Extensive scale backup in supervisor mode
+ System can estimate number of additional records that may be added to the scale
+ Default values for the four types of products; Fixed Weight, By Count, Random Weight, and Fluid Ounces
+ UPC, EAN 13, EAN 128 Barcodes and GS1 DataBar
+ Onscreen alphanumeric keyboard and keypad
+ Cassette label loading system provides fast and efficient change of label stock
+ Meets federal labeling requirements
+ Track operator changes
+ Remotely access the scale from your help desk

SOFTWARE

+ Linux embedded operating system
+ Interfaces with scale management software such as:
  - Invatron's PLUM
  - ADC's Interscale
  - Genesis Software
  - Data GateWeigh
  - HCT
  - Hobart HTe
    - Content management
    - Label editing
    - Remote updates

SPECIFIER STATEMENT

HTs scales include a single-core processor and Linux operating system. HTs scales weigh, automatically compute a price from stored PLU's, and print a label. The HTs scales utilize Hobart's patented, two screen swipe technology user interface for operator ease of use. Scales on the same network may connect remotely to other scales for a HWS (Hand Wrap Station) or other applications.

Approved by_____ Date_____ Approved by_____ Date_____

TECHNICAL SPECIFICATIONS

+ 10.1" touch screen operator display - WSVGA TFT LCD, LED backlit, 5 wire resistive type
+ 7" standard customer display – WVGA TFT LCD, LED backlit
+ Single-core processor
+ 1GB DDR3 RAM
+ 8GB storage media
+ 802.3 10/100 Mbps Ethernet or 802.11 a/b/g/n (Ethernet standard, wireless is optional)
+ One external USB 2.0 port
+ High resolution thermal printhead for detailed graphics (store logos) and smaller bar codes – 203 dpi (8 dots per mm)
+ Accepted labels:
  - 1.5" and 2.25" width
  - 1" to 9.5" length die cut labels
  - Continuous labels
  - Oval labels

SPECIFICATIONS

Platter: 14" wide x 15" deep

Weigher Capacity:
0 lb. - 12 l.b x 0.005 (0 - 6 kg x .002 kg)
12 lb. - 30 lb. x 0.01 (0 - 15 kg x .005 kg)

Pricing Capacity: Up to 999.99 in steps of .01

Electrical: 100-240 volts, 50-60 Hz, single phase, 1.42 amps max, 170 watts max. 9 foot standard cord cap with ground type plug furnished. Idle mode power consumption 18.8 W.

Media Support: MPEG4, AAC, AVC/H.264

Weights and Measures Certification:
+ USA Certification – 13-101
+ Canada Certification – AM-5927C

Environment: Operating temperature limits are 14°F (-10°C) to 104°F (40°C) ambient. Scale operates satisfactorily in relative humidity of 10 to 85%.

Shipping Weight: 34 lbs.

DETAILS AND DIMENSIONS

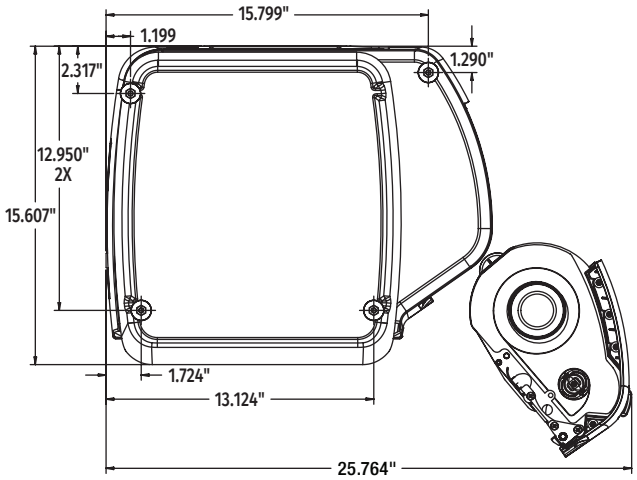

The below diagram reflects the customer facing panel for the HTs-7LS.

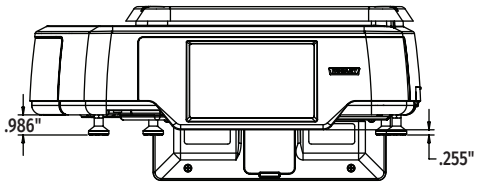

The below diagram reflects the customer facing panel for the HTs-LS and the HTsP-LS.

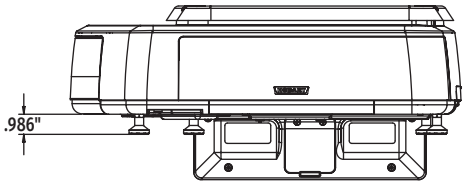

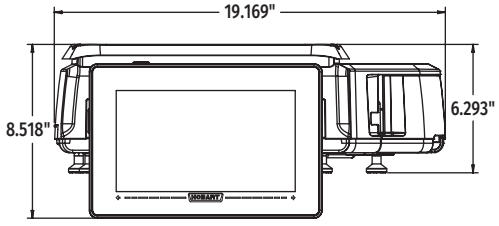

The customer facing panel for the HTs-LS and HTsP-LS is a solid black plate.

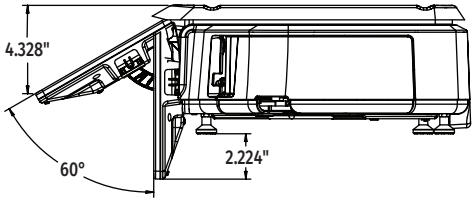

As continued product improvement is a policy of Hobart, specifications are subject to change without notice.