HOBART

Project _____

AIA # _____ SIS # _____

Item # _____ Quantity _____ C.S.I. Section 114000

FOOD PREPARATION

FP400i

Continuous-Feed Food Processor



SPECIFIER STATEMENT

Specified unit will be an NSF rated Hobart continuous-feed food processor with a two-speed motor and triple hopper/cover interlock. Standard unit comes with the food processor base. The FP400i offers four feed hopper choices including the cutting cylinder, stacking cylinder (manual push feed or tubular feed), bulk feed hopper and cylinder, and cheese cylinder with extended manual push feed. These must be purchased separately. Unit can process up to 132 pounds per minute with plate speeds of 240 and 480 RPM. Over 40 individual plates available.

MODELS

❑ **FP400i** Continuous-Feed Full Hopper Food Processor

FEED HOPPER CHOICE

+ Cutting Cylinder – 400iPFD-CYL
+ Stacking Cylinder – 400iSTK-CYL
  - Choose one or both
    - ❑ Manual Push Feed Assembly – MNL400i-HANDLE
    - ❑ Tubular Feeder – 400iTB-FEED
+ Bulk Feed Hopper and Cylinder – 400iFD-HOPPER (complete)
+ Cheese Cylinder and Extended Manual Push Feed – 400iCHS-CYL (complete)

STANDARD FEATURES

+ Red OFF, green ON button
+ Gear transmission
+ Stainless steel housing, feeders and feed cylinders
+ Two-speed motor
+ Triple hopper/cover interlock
+ Two stationary front legs and two rear legs with casters for ease of mobility
+ Processes up to 132 pounds per minute
+ Wide mouth on chute for increased throughput
+ Plate speeds 240 and 480 RPMs
+ No Volt Release interlock

ACCESSORIES (Available at extra cost)

❑ 3-Pack Plates: 1/16, 5/32 slicer plates, 3/16 shredder plate, 1 wall rack

❑ 6-Pack Plates: 1/16, 5/32, 3/8, 7/32, slicer plates, 3/16 shredder plate, and 3/8 dicer plate, 2 wall racks

❑ 3-Peg Wall Rack: designed to hold three plates for additional plate storage

❑ Stainless steel accessory cart

❑ Adjustable height stainless steel lug cart

❑ Plastic receiving pan

❑ Stainless steel receiving pan

❑ Over 40 individual plates available

❑ Stainless steel tray

FP400i CONTINUOUS-FEED FOOD PROCESSOR

Approved by_____ Date_____ Approved by_____ Date_____

HOBART

FP400i
Continuous-Feed Food Processor

SOLUTIONS / BENEFITS

PERFORMANCE

2 HP Motor with Planetary Drive

Large, Full-Size Feed Hopper

+ Supports processing capabilities for large variety of products and eliminates pre-cutting
+ Design permits continuous cutting of long products

Plate Speeds of 240 and 480 RPMs

+ Precise cutting and dicing action without bruising
+ Slower speed for good quality processing of more delicate products like tomatoes
+ Higher speed for quicker processing of more durable products like potatoes

Floor Mount Design

+ Plates remove in seconds
+ Produces consistent quality product results

Decoring Screw

+ Deflects products away from the plate hub for complete processing

EASE OF USE

Floor Mount Design

+ Convenient feed height for easy loading
+ Two casters to allow for movement for setup/storage
+ Helps to reduce operator fatigue

Stainless Steel Hopper and Housing

+ Stainless steel finish resists hard cleaners
+ Easy clean up

Push Feed Setup

+ Full moon hopper for large loads
+ Ergonomic handle for pushing products into hopper

Tube Feed Setup

+ Provides four round tubes for continuous feeding of various long or round products

SANITATION & CLEANING

Stainless Steel Hopper and Housing

+ Stainless steel finish resists harsh cleaners
+ Easy clean up

Bulk Hopper Setup

+ High capacity feed for large batches

OPERATOR ASSURANCE

Double Interlock Switch

+ Prevents machine from running when pusher plate swings away or is open

No Volt Release

+ Unit will not automatically turn on if power is lost

SPECIFICATIONS

Electrical: 208-240/60/3, 3 conductor power cord (16 AWG) is 6 feet in length. Furnished with NEMA L15-20P locking type plug.

Motor: 7.5 amps, 2 HP two speed motor, 240/480 RPM gear driven transmission

Switches: Easy to operate (red) OFF and (green) ON switch. Pusher plate and feed hopper interlocks.

Standard Equipment: Basic unit with deflector plate, decoring screw and cleaning brush.

Warranty: Unit has full one-year warranty on parts, labor and mileage against manufacturer's defects. Service contracts are available.

Cutting Tools: The plates feature stainless steel construction with cutlery grade stainless steel knives. Plate combinations for dicing are shown in the chart below.

FP400i Food Processor												
	S35DICE-7/32	S35DICE-9/32	S35DICE-3/8	S35DICE-1/2	S35DICE-1/2LOW	S35DICE-5/8	S35DICE-5/8LOW	S35DICE-3/4	S25DICE-3/4LOW	S35DICE-1	S35DICE-1LOW	S3FRY-3/8
3SLICE-1/32-SS (1mm)												
3SLICE-1/16-SS (1.5 mm)												
3SLICE-1/8-SS (3 mm)	✓	✓	✓	✓		✓		✓		✓		
3SLICE-5/32-SS (4 mm)	✓	✓	✓	✓		✓		✓		✓		
3SLICE-7/32-SS (6 mm)	✓	✓	✓	✓		✓		✓		✓		
3SLICE-5/16-SS (8 mm)		✓	✓	✓		✓		✓		✓		
3SLICE-3/8-SS (10 mm)			✓	✓		✓		✓		✓		✓
3SLICE-9/16-AL (14 mm)							✓		✓		✓	
35SFSLC-7/32 (6 mm)	✓	✓	✓	✓		✓		✓		✓		
35SFSLC-5/16 (8 mm)		✓	✓	✓		✓		✓		✓		
35SFSLC-3/8 (10 mm)			✓	✓		✓		✓		✓		
35SFSLC-1/2 (12 mm)					✓		✓		✓		✓	
35SFSLC-5/8 (15 mm)							✓		✓		✓	

Weight: Net - 139 lb., Feed Cylinder - 13 lb., Manual Push Feeder - 17 lb., Continuous Feed Hopper - 32 lb., Cheese Cylinder - 46 lb.

DETAILS AND DIMENSIONS

Stacking Cylinder Dimensions

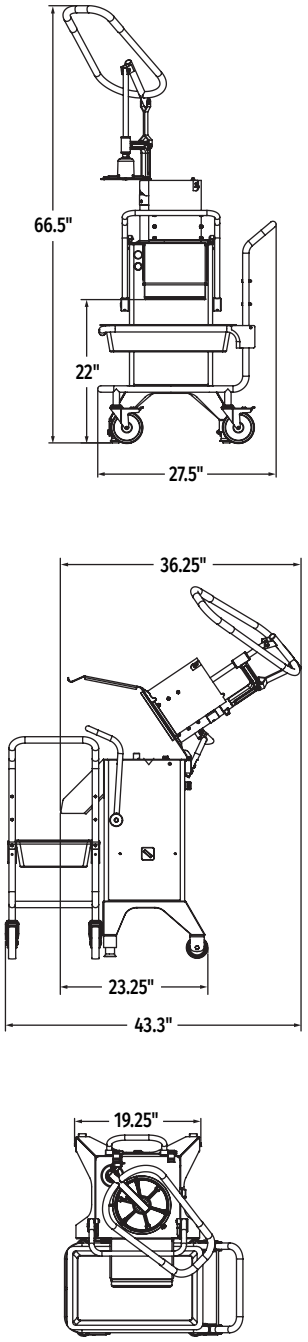

Bulk Feed Hopper and Cylinder Dimensions

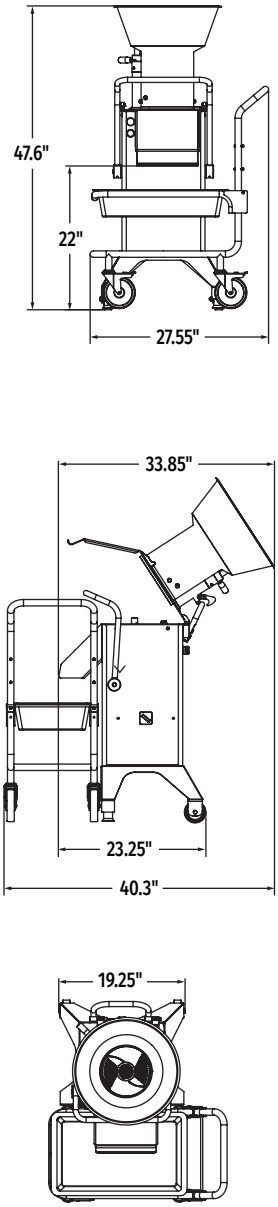

Cutting Cylinder Dimensions

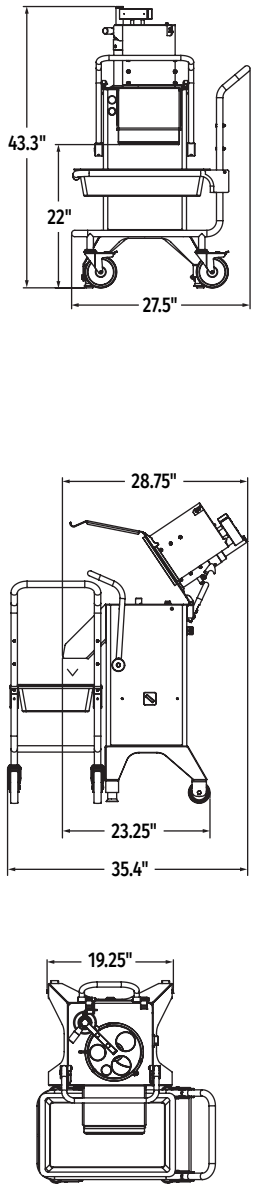

Cheese Cylinder Dimensions

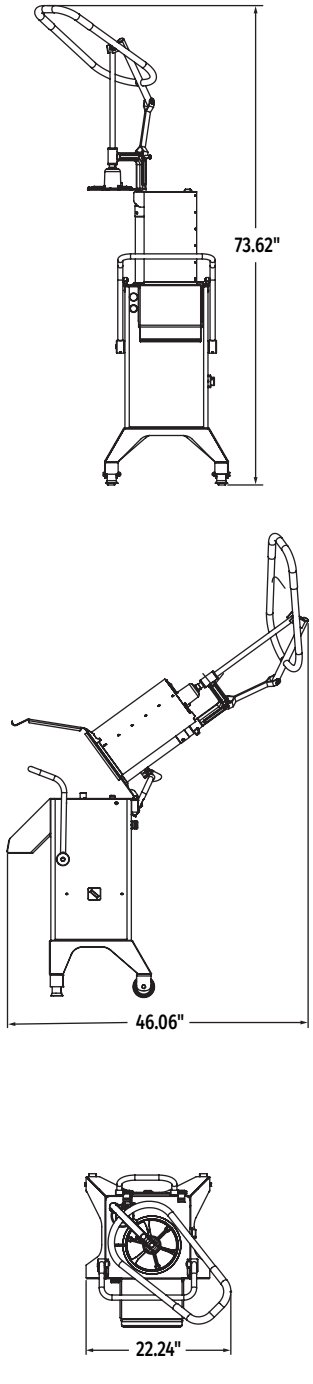

CAD and/or Revit Files Available

The FP400i offers several options for more versatility. See the various configuration options below:

HOPPER CONFIGURATIONS

MANUAL PUSH FEED



Best for:

The manual push feed can prepare all types of products, both large and small. The ergo-loop design provides a lever effect that also reduces the need for manual force when preparing large and hard products, such as root vegetables, cabbage and cheese.

BULK FEED



Best for:

The bulk feed enables continuous filling by the bucket load for preparation of primarily round products. Capacity is very high because the machine runs continuously and is therefore extremely time-efficient. The FP400i with a Feed Hopper can be beneficially included in a continuous production flow.

TUBE FEED



Best for:

To be able to easily cut long and narrow products vertically, and round products in a specific direction, the tube feed is used. Good support for products such as cucumbers and leeks. It is also easy to "bunch" herbs together in the tube. This feeder has 4 tubes:

Tube Dimensions

Tube 1: 35 mm (1.37")
Tube 2: 60 mm (2.36")
Tube 3: 73 mm (2.87")
Tube 4: 73 mm (2.87")

CHEESE ASSEMBLY



Best for:

The cheese cylinder assembly can shred whole blocks of cheese, up to 13.78 inches. This eliminates the need to cut blocks of cheese into smaller pieces, saving time when processing.

CYLINDER OPTIONS



Plugs and Receptacles:

Machine Voltages	
Service Current Requirement if Plug Connected	230/60/3
	20 Amp.
Terminal Designation of Plug	3 Pole 4 Wire Grounding
NEMA Plug Configuration	L15-20P
Plug Configuration	
Molded Plug on Cord	No
Plug - Straight/Angle	Straight
NEMA Receptable or Connector Configuration	L15-20R

FP400i CONFIGURATIONS

Base + Cylinder + Feed Option = Complete System



Standard Unit
FP400-1



Stacking
400iSTK-CYL



Cutting
400iPFD-CYL



Feed Hopper
Sold with Bulk Feed Hopper



Cheese Cylinder
Sold with Extended Manual Push Feed



Manual Push Feed
400iMNL-HANDLE

or



4 Tube Feed
400iTB-FEED





Manual Push Feed
400iMNL-HANDLE

or



4 Tube Feed
400iTB-FEED





Bulk Feed Hopper
400iFD-HOPPER





Extended Manual Push Feed
400iCHS-CYL



As continued product improvement is a policy of Hobart, specifications are subject to change without notice.