centerline by HOBART

Project _____

AIA # _____ SIS # _____

Item # _____ Quantity _____ C.S.I. Section 114000

CCH32
Combination Food Processor



c UL us NSF

MODEL

- ❑ **CCH32** Combination Food Processor
- ❑ **CCH32-1A** Combination Food Processor with CCH-2PACK

STANDARD FEATURES

+ 2 speed settings for high quality results
+ SureSense™ speed control
+ Continuous feed operation at 500 RPM
+ Bowl processing at 1450 RPM
+ Heavy-duty plastic base
+ Stainless steel cutter/mixer attachment bowl
+ BPA-free Tritan™ lid and scraper; continuous-feed attachment and ejector plate
+ Compact design for space saving operation
+ All removable parts are dishwasher safe
+ 1.34 HP motor

ACCESSORIES

- ❑ CCH-2PACK – 2 Plate Package: 5/32" Slicing Plate; 5/32" Shredder Plate

  ALL FP100 cutting tools (except dicing) will fit this machine

SPECIFIER STATEMENT

Specified unit will be an NSF rated combination food processor. Specified unit has continuous feed operation at 500 RPM and bowl processing operation at 1450 RPM. Food processor offers SureSense™ speed control, a heavy-duty plastic base and has a compact design. Features a 1.34 HP motor and 2 speed settings for high quality results. All removable parts are dishwasher safe.

CCH32 COMBINATION FOOD PROCESSOR

Approved by _____ Date _____ Approved by _____ Date _____

centerline by HOBART

CCH32
Combination Food Processor

SOLUTIONS/BENEFITS

PERFORMANCE

1.34 HP Motor

3.2 quart stainless steel bowl

Patented integral multi-function wiper system

+ Guides product into cutting tools faster

SureSense Speed Control

+ Identifies which processor head is installed and adjusts speed for optimal results
+ Chute Head:
  - 500 RPM – soft products (tomatoes, bananas, kiwis)
+ Bowl Style:
  - 1450 RPM – delicate dishes (salsa, parsley)

Double Tritan™ cover with bowl gasket

+ Holds up to heat better than polypropylene

EASE OF USE

3.2 quart stainless steel bowl

Patented integral multi-function wiper system

+ Provides better viewing by cleaning underside of the cover

Double Tritan™ cover with bowl gasket

+ Ensures clear visibility while preventing escape of contents for more complete processing

SureSense Speed Control

+ Identifies which processor head is installed and adjusts speed for optimal results

SANITATION & CLEANING

3.2 quart stainless steel bowl

Double Tritan™ cover with bowl gasket

+ Ensures clear visibility while preventing escape of contents for more complete processing

OPERATOR ASSURANCE

Double Interlock Switch

+ Prevents machine operation when the pusher plate swings away, is open or if the feed cylinder is removed

SPECIFICATIONS

Motor: Two speeds, 1.34 HP motor, thermal motor protection with automatic reset.

Electrical: Furnished in 120/60/1, 9 amps, UL listed.

Finish/Construction: Machine base of plastic. Cutter/mixer attachment bowl of stainless steel, lid and scraper of Tritan™. Continuous feed attachment and ejector plate of Acetal™.

Speeds: Two speeds with SureSense™ speed control. 500 RPM for continuous feed operations. 1450 RPM bowl processing.

Cord and Plug: 3-wire electrical cord and plug. Cord is 6' in length.

Warranty: All parts, service and travel coverage for one year excluding wear items.

Capacity: 3.2 quart stainless steel cutter/mixer bowl. Processes 4.4 pounds per minute with continuous-feed attachment.

Controls: Sealed dial controls with integrated pulse function.

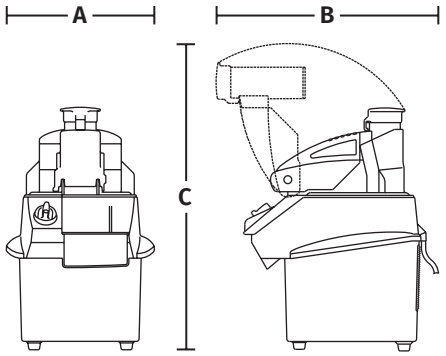

Continuous Feed

Cutter/Mixer (Bowl)

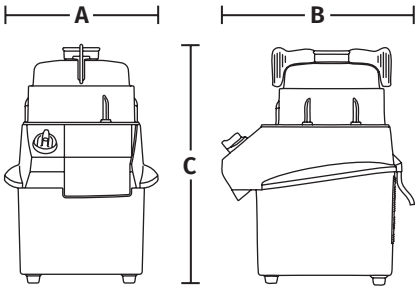

Model No.	Capacity	Product Dimensions			Weight
		Width A	Depth B	Height C	
CCH32	Cont. Feed – 4.4 lbs./min. (2 kg/min.)	11" (280 mm)	13¾" (350 mm)	23" (585 mm)	Net 23 lbs. (11 kg) Ship 33 lbs. (15 kg)
	Bowl – 3.2 quarts (3 liters)	11" (280 mm)	13" (330 mm)	17" (432 mm)	

Motor	Electrical	Cutting Speeds	Box Dimensions		
			Width A	Depth B	Height C
1.34 HP	120/60/1 9 amps	Cont. Feed – 500 rpm Bowl – 1,450 rpm	16¼" (413 mm)	16¼" (413 mm)	27" (686 mm)

As continued product improvement is a policy of Hobart, specifications are subject to change without notice.

CAD and/or Revit Files Available

HOBART • 701 S Ridge Avenue, Troy, OH 45373 • 1-888-4HOBART • www.hobartcorp.com

Printed in U.S.A.