Project _____

AIA # _____ SIS # _____

Item # _____ Quantity _____ C.S.I. Section 114000

CORECOMBI 61G

Gas 6-Level Half Size Steam Generator Combi



CoreCombi 61E
shown on optional stand

C US SANITATION NSF/ANSI 4

SPECIFIER STATEMENT

CoreCombi model 61G features 10" touchscreen, Multi-function modes Convection, Steam, and Combi with predictive humidity control, steam generator for quality steam, programmable recipes, multi-shelf timers, automatic cleaning with water recirculation, auto descale, non-proprietary liquid chemicals, auto-reversing fan, LED lights, triple pane glass door, USB port, multi-point food probe, 3 grab-and-go wire racks, 120 V / 60 HZ. One-year limited parts and labor warranty.

Exterior Dimensions:
Combi: 33.7"H x 35" W x 34.2" D
Combi on stand: 60"H x 35" W x 34.2" D
Stacked (61G / 61G): 76.7"H x 35" W x 47.5" D

Pan Capacity:
(6) 12" x 20" hotel pans or
(6) 13" x 18" half sheet pans

MODEL

❑ **CORE-61G** 6-Level half size

STANDARD FEATURES

- Multiple cooking capabilities include: bake, steam, roast, grill, air-fry, rethermalization, proof, finish, poach, stew, low temp, defrost, cook & hold and more.
- 10" touch screen.
- Multi-point food probe.
- Multi-function cooking and cleaning modes.
- Programmable recipes, Multi-Level Shelf Timers, and Multi-Product functions.
- Patented automatic humidity control based on temperature. Humidity range: low, medium & high.
- Auto cleaning wash system with water recirculation using non-proprietary liquid detergent.
- Patent-pending cavity deliming process, in conjunction with the steam generator deliming, provides an effective method for preventative maintenance.
- Exclusive grab-and-go racks with cutout design.
- Custom settings allow for user personalization, interactive service diagnostics, data collection and operator instructional help screens.
- Temperature: 80-575°F with visual display of set and actual temperature.
- Continuous timer: tracks up to 99:59:59 hours, minutes, and seconds. Set, remaining or count time displayed.
- Auto-reversing fan with 3 adjustable speeds.
- Flashing LED lights & audible alarm system alert user when cooking cycle ends.
- USB port to upload or download information.
- Universal spray hose kit.
- One-year limited parts and labor warranty.

ACCESSORIES - *see last page*

Approved by_____ Date_____ Approved by_____ Date_____

WATER QUALITY STATEMENT

The fact that a water supply is potable is no guarantee that it is suitable for steam generation. All steam equipment is subject to contamination and failure due to chemical and mineral content found in water. A suitable Water Treatment System and regular filter replacements coupled with routine deliming is the recommended minimum. Damage as a result of poor water quality or lack of required owner/operator maintenance is the responsibility of the owner/operator.

Your water supply must be within these general guidelines:

DYNAMIC WATER PRESSURE	15-87 psi (30-60 recommended)
HARDNESS*	1 - 3 grains
SILICA	less than 13 ppm
TOTAL CHLORIDE	less than 30 ppm
pH RANGE	7-8
CHLORINE & CHLORAMINE	0 ppm
ALKALINITY	less than 20 ppm
TDS	less than 60 ppm
UN-DISSOLVED SOLIDS	less than 5 microns

* 17.1 ppm = 1 grain of hardness

Other factors affecting steam generation are iron content, amount of chlorination and dissolved gases. Water supplies vary from state to state and from locations within a state. Therefore it is necessary that the local water treatment specialist be consulted before the installation of any steam generating equipment.

USER RESPONSIBILITY

The product must be installed, cleaned and maintained as described in the Manual furnished with the product. It is the responsibility of the owner and installer to comply with local codes.

As continued product improvement is a policy of Justa by Vulcan, specifications are subject to change without notice.

CORECOMBI 61G

Gas 6-Level Half Size Steam Generator Combi

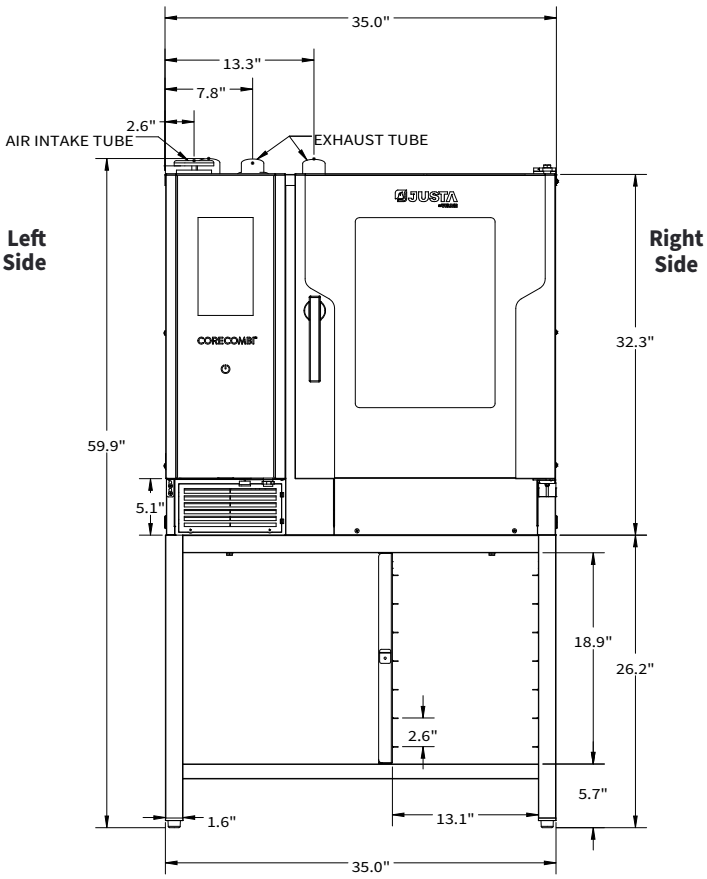

Front View

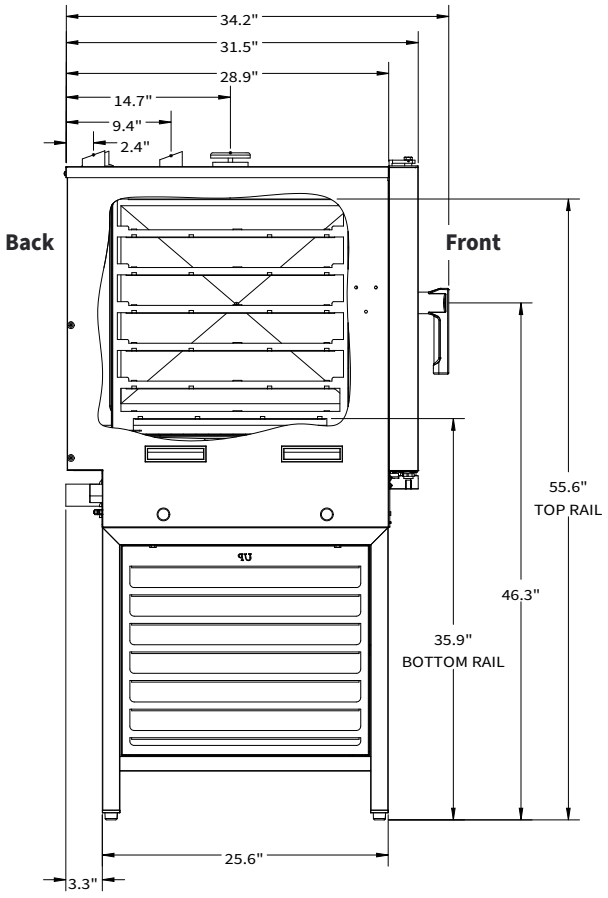

Side View

External Dimensions	Height	Width	Depth
CORE-61G	33.7"	35"	34.2" (w/handle)
CORE-61G on stand	59.9"	35"	34.2" (w/handle)
Packaged CORE-61G	40.2"	39.4"	38.6"

Weight	Machine	Shipping
CORE-61G	452 Lbs.	522 Lbs.

Clearance	Left	Back	Right
CORE-61G	2*"	2.5"	2"

**External heat sources may require space or 3" optional heat shield.*

Service Connections
Electrical 120/60/1 with 6' cord and plug NEMA 5-15. 10 amp
Water 3/4'' GHT-M (male garden hose) connection on the machine. *Note: water is a customer supplied utility that must meet the water specs of the machine.*
Drain 2" diameter
Gas Natural: **49,500 BTU/hr.** 3/4" NPT male connection on machine. Supply pressure - 6.5" - 10" W.C. *Ships as natural gas. Future field conversion for propane as a kit.*

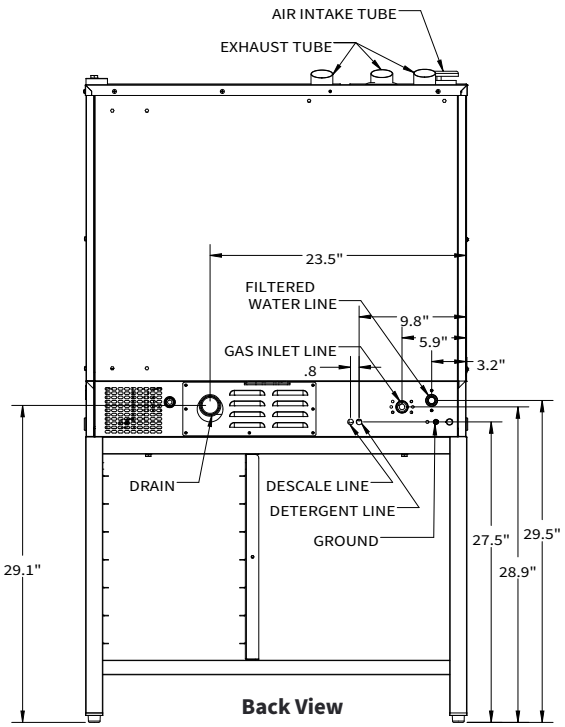

Back View

As continued product improvement is a policy of Justa by Vulcan, specifications are subject to change without notice.

STACKED CORE-61G / CORE-61G

Double Gas 6-Level Half Size Steam Generator Combi Ovens

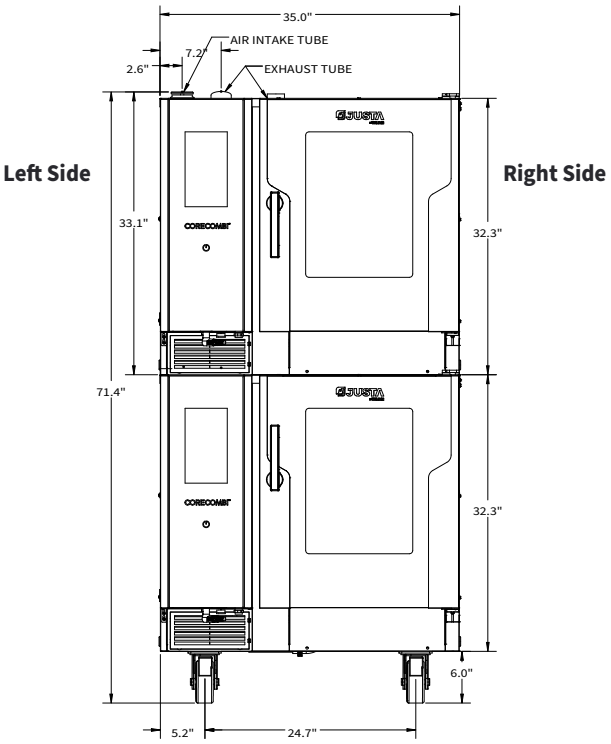

Front View

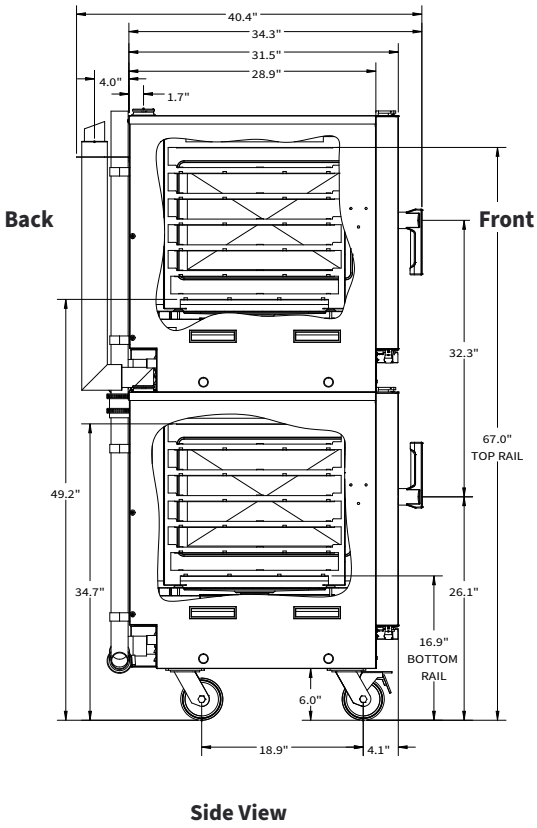

Side View

External Dimensions	Height	Width	Depth
Stacked: CORE-61G/61G	71.4"	35"	40.4" (w/handle)

Clearance	Left	Back	Right
Stacked CORE-61G / CORE-61G	2*"	6.5"	2"

**External heat sources may require space or 3" optional heat shield.*

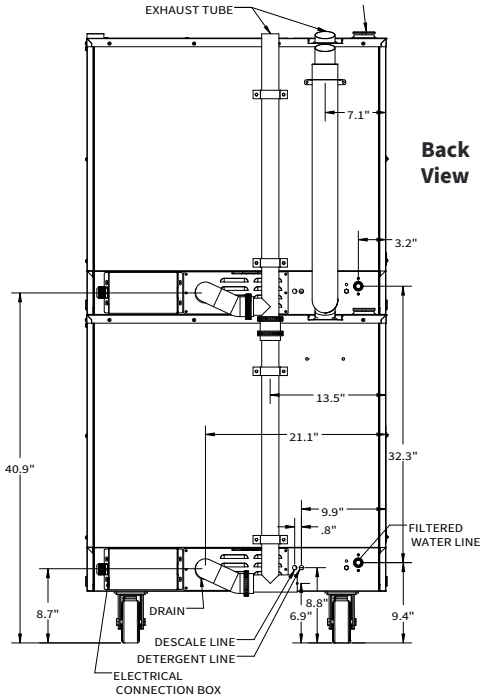

Back View

As continued product improvement is a policy of Justa by Vulcan, specifications are subject to change without notice.

ACCESSORIES

COOKING

❑ **VRACK-61**	Stainless steel grab-and-go racks (3)
❑ **PERFTRAY1.1**	Perforated baking tray 12"x20"
❑ **EGGTRAY**	Eggs tray 8 holes
❑ **ENAMEL40**	Tray granite enameled depth 40mm
❑ **ENAMEL60**	Tray granite enameled depth 60mm
❑ **PIZZATRAY**	Pizza and baking tray
❑ **GRILL-PIZZATRAY**	Cross grill & pizza DURAQUARZ coated reversible
❑ **DIAMONDGRILL**	Baking and grill tray diamond shape
❑ **ROAST-BAKETRAY**	Roasting and baking tray
❑ **CHICKRACK6**	Stainless steel chicken rack - 6
❑ **CHICKRACK8**	Stainless steel chicken rack - 8
❑ **RIBRACK**	Ribs rack
❑ **1220-GRILLOP**	Grilling grid (open type)
❑ **1220-BASKET**	Stainless steel fry basket 12"x20"
❑ **FRYBASKET**	Frying baskets coated with DURAPEK

STANDS, STACKING KITS, CASTERS AND FEET

❑ **CORE-STAND1**	Stainless steel stand with shelving
❑ **CORE-STACK61G**	Stacking kit
❑ **CORE-CAST**	Stand caster kit
❑ **CORE-STACKCAST3**	3" low profile stacking casters
❑ **CORE-DCSTACK**	Drain connection kit stacking
❑ **CORE-DCSTAND**	Drain connection kit stand
❑ **CORE-FEET**	Adjustable feet kit

WATER FILTRATION

❑ **CB15K-SYSTEM**	Hollow Carbon Filter System 15,000 gal. (carbon only treatment)
❑ **CB30K-SYSTEM**	Hollow Carbon Filter System 30,000 gal. (carbon only treatment)
❑ **SMF600-SYSTEM**	ScaleBlocker® (carbon with scale inhibitor) water filtration system
❑ **SMF620-SYSTEM**	ScaleBlocker® (carbon with scale inhibitor) water filtration system
❑ **WS40-NOINSTALL**	Water Softening (Carbon CBK System required) 40-lb capacity (hard water treatment)
❑ **WS80-NOINSTALL**	Water Softening (Carbon CBK System required) 80-lb capacity (hard water treatment)
❑ **HOSEWTR3/4BBV**	Flex stainless steel water connection 72", 3/4" GHT-F (female garden hose) on both ends

CLEANER

❑ **VDL-1**	Vulcan detergent liquid, 2 per package, 2.5 gal each, sold per case
❑ **VRL-1**	Vulcan rinse (descale) liquid, 2 per package, 2.5 gal each, sold per case

MISC

❑ **CORE-HEAT61**	Heat shield (for single or stacked machines)

As continued product improvement is a policy of Justa by Vulcan, specifications are subject to change without notice.