Project_____

AIA # _____ SIS # _____

Item # _____ Quantity _____ C.S.I. Section 114000

CORE SERIES
SX60F RANGE
60" Range with 6 Open Burners & 24" Manual Griddle



Model SX60F-6B24G

Image shown is representative only and does not reflect the latest product design.

SPECIFIER STATEMENT

Core Series 60" wide gas restaurant range, Vulcan Model No. SX60F-6B24G. Stainless steel front, sides, backriser, high shelf and bullnose. High temperature burner knobs with set screw. Stainless steel bullet feet. Porcelain door liner and oven bottom. Six 28,000 BTU/hr. cast top burners with lift-off burner heads. One shrouded flash tube pilot for every two burners. 12" x 12" cast top grates with aeration bowls. Heavy duty top grates and burner heads. ¾" thick x 24"w manual griddle, 30,000 BTU/hr. Compression spring door hinge system for durability. Two 30,000 BTU/hr. standard ovens each measure 26¾"w x 26"d x 13¾"h. Thermostat adjusts from 250° to 500°F. One oven rack with four rack positions for each oven. ¾" rear gas connection and gas pressure regulator. Total input: 258,000 BTH/hr.

Exterior Dimensions:
60" W x 33 ⅛" D x 58⅝" H on 6" adjustable legs
63½" W with external grease trough

MODELS

❑ **SX60F-6B24GN**
2 Standard Ovens / 24" Manual Griddle / Natural Gas

❑ **SX60F-6B24GP**
2 Standard Ovens / 24" Manual Griddle / Propane

STANDARD FEATURES

- Stainless steel front, backriser, lift-off high shelf
- 6" stainless steel adjustable legs
- 28,000 BTU/hr open top burners with lift-off heads
- Shrouded flash tube pilot system (one pilot per two burners)
- 12" x 12" cast top grates with aeration bowls
- Welded crumb tray
- 30,000 BTU/hr. standard oven cavity measures 26¾" W x 26" D x 13¾" H
- Oven thermostat adjusts from 250° to 500°F
- One oven rack and four rack positions for each oven
- ¾" thick x 24" W manual griddle, 30,000 BTU/hr. total
- ¾" rear gas connection and gas pressure regulator
- One year limited parts and labor warranty

ACCESSORIES *(Packaged & Sold Separately)*

❑ Extra oven rack

❑ Reinforced backriser and high shelf for mounting salamander broiler

❑ Set of six casters (two locking)

ETL SANITATION LISTED
Intertek

Approved by_____ Date_____ Approved by_____ Date_____

CORE SERIES - SX60F - 60" RANGE WITH 6 OPEN BURNERS & 24" MANUAL GRIDDLE

CORE SERIES - SX60F RANGE

60" Range with 6 Open Burners & 24" Manual Griddle

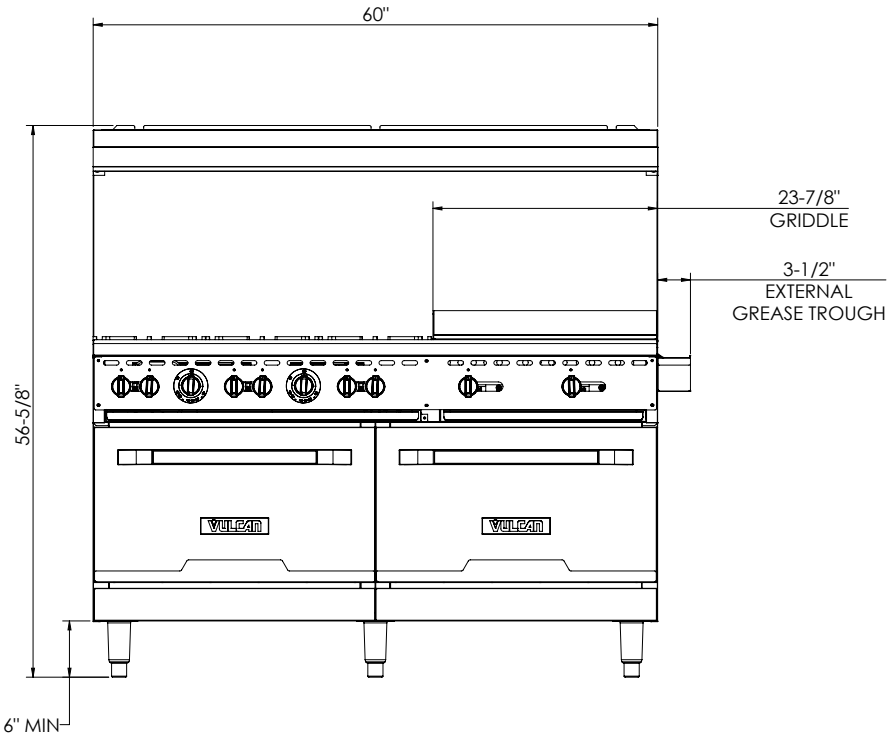

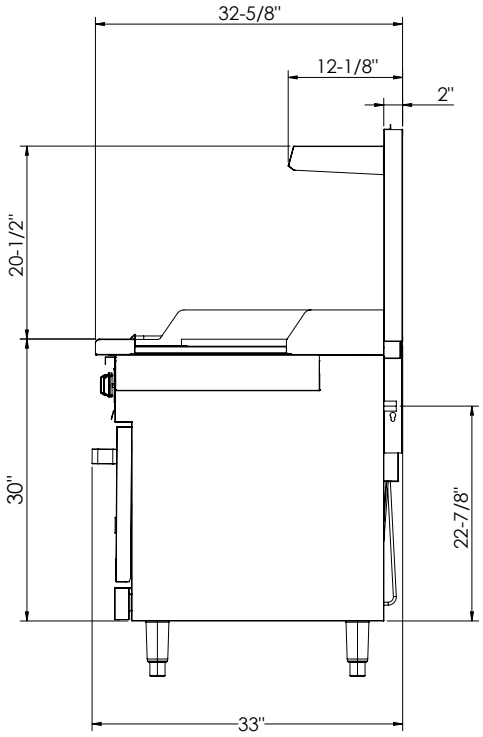

Gas Pressure

Natural Gas: 5.0" (127mm) W.C.
Propane Gas: 10.0" (254 mm) W.C.

A gas pressure regulator supplied with the unit must be installed.

Gas line connecting to appliance must be 3/4" diameter or larger. If flexible connectors are used, the inside diameter must be the same as the 3/4" iron pipe.

Specify type of gas when ordering.
Specify altitude when above 2,000 feet.

Clearances	Combustible	Non-Combustible
Rear	12"	6"
Right Side	10"	0"
Left Side	10"	0"

Top Configuration	Model	Description	Total Input BTU / Hr.	Shipping Weight Lbs. / KG
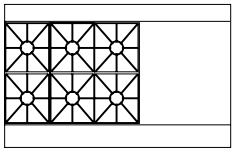	**SX60F-6B24GN**	6 Burners / 2 Standard Ovens / 24" Manual Griddle / Natural Gas	258,000	815 / 370
	SX60F-6B24GP	6 Burners / 2 Standard Ovens / 24" Manual Griddle / Propane	258,000	815 / 370

This appliance is manufactured for commercial use only and is not intended for home use.

As continued product improvement is a policy of Vulcan, specifications are subject to change without notice.